BK3136A++CF

CHEST FREEZER

This product was manufactured using the latest technology in environmentally friendly conditions.

WARNING!

In order to ensure a normal operation of your refrigerating appliance, which uses a completely environmentally friendly refrigerant the R600a (flammable only under certain conditions) you must observe the following rules:

- Do not hinder the free circulation of the air around the appliance.
- Do not use mechanical devices in order to accelerate the defrosting, others than the ones recommended by the manufacturer.
- Do not destroy the refrigerating circuit.
- Do not use electric appliances inside the food keeping compartment, other than those that might have been recommended by the manufacturer.

GB Content

Advice for recycling of the old appliance /1
Packing Recycling /2
Transport instructions /2
Warnings and special advice /2
Setting up /3
Electric connection /3
Switching off /4
Operation /4
Appliance description /4
Freezer operation /4
Advice for food conservation /5
Defrosting of the appliance /5
Cleaning of the appliance /6
Replacing the interior light bulb /6
Defects finding guide /6
Appliance data sheet /7

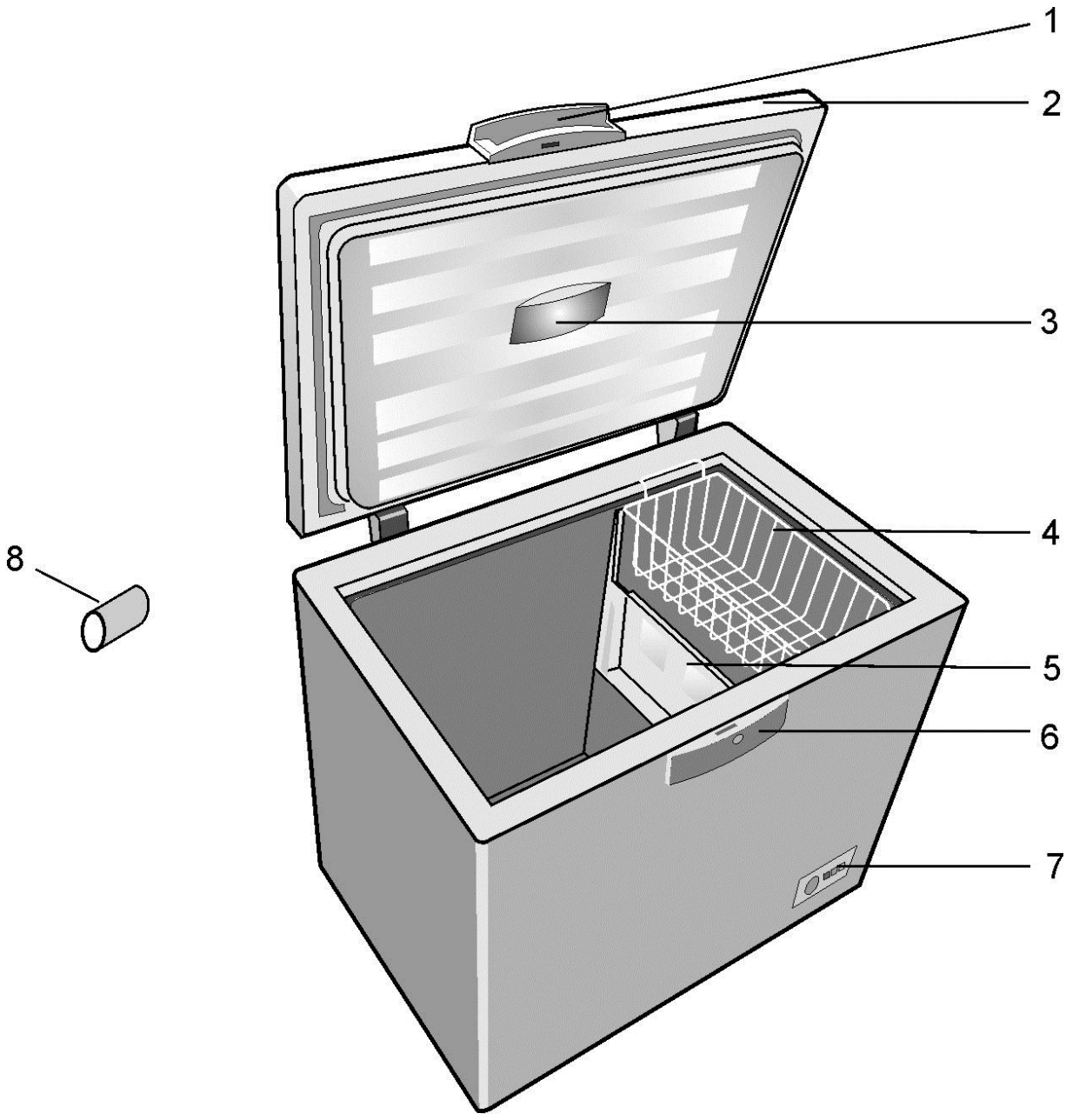

1

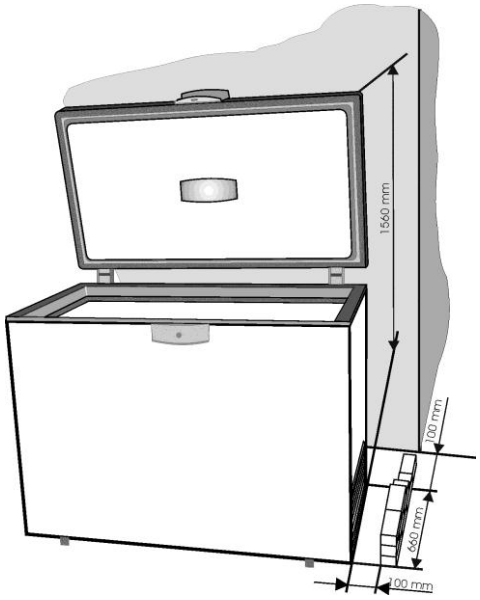
1560 mm
100 mm
550 mm
100 mm

2

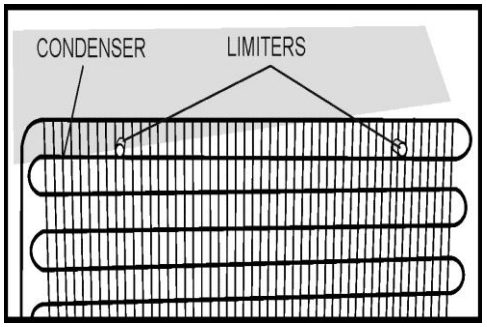
CONDENSER
LIMITERS

3

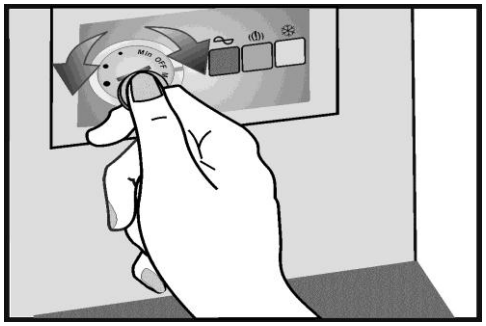
Min OFF Max

4

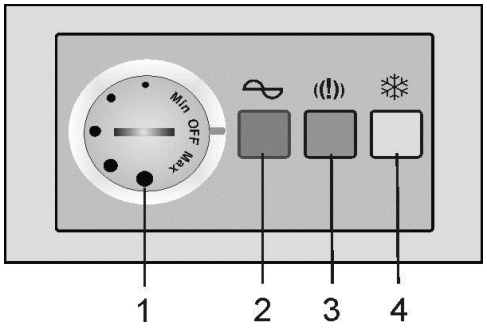
Min OFF Max
1
2
3
4

5

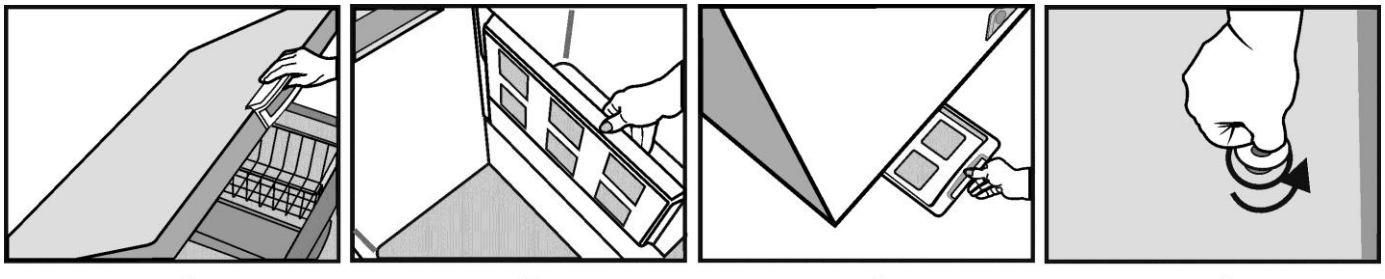
1
2
3
4

6

Congratulations for your choice!

The chest freezer you have purchased is one in the BEKO products range and represents a harmonious joinng between the refrigeration technique with the aestetical outlook. It has a new and attractive design and is built according to the European and national standards which guarantee its operation and safety features. At the same time, the used refrigerant, R600a, is environment-friendly and it does not affect the ozone layer.
In order to use the best your freezer, we advise you to read carefully the information in these user instructions.

Advice for recycling your old appliance

If your newly purchased appliance replaces an older appliance, you must consider a few aspects.
The old appliances are not valueless scrap. Their disposal, while preserving the environment, allows the recovery of important raw materials.
Make your old appliance useless :
- disconnect the appliance from the supply;
- remove the supply cord (cut it);
- remove the eventual locks on the door to avoid the blocking of children inside, while playing, and the endangering of their lives.

The refrigerating apliances contain insulating materials and refrigerants which require a proper recycling.

This appliance is not intended for use by person with reduced physical, sensory or mental capabilities or lack of experience and knowledge unless they have been given supervision or instruction concerning use of the appliance by a person responsible for their safety.
Children should be supervised to ensure that they do not play with the appliance.

Packing Recycling

WARNING!
Do not allow children to play with the packing or with parts of it. There is the risk of suffocation with parts of corrugated cardboard and with plastic film.
In order to get to you in good condition, the appliance was protected with a suitable packing. All the materials of the packing are compatible with the environment and recyclable. Please help us recycle the packing while protecting the environment !

IMPORTANT!
Before putting the appliance in operation, read carefully and entirely these instructions. They contain important information concerning the setting up, use and maintenance of the apliance.
The manufacturer is free of any responsibility if the information in this document are not observed. Keep the instructions in a safe place in order to reach them easily in case of need. They can also be useful subsequently by another user.

ATTENTION!
This appliance must be used only for its intended purpose, (household use), in suitable areas, far from rain, moisture or other weather conditions.

Transport instructions

The appliance must be transported, as much as possible, only in vertical position. The packing must be in perfect condition during transport.
If during transport the appliance was put in horisontal position (only according to the markings on the packing), it is advised that, before putting it into operation, the appliance is left to rest for 12 hours in order to allow the settling of the refrigerating circuit.
The failure to to observe these instructions can cause the breakdown of the motorcompressor and the cancellation of its warranty.

Warnings and general advice

- Do not plug in the appliance if you noticed a failure.
- The repairs must be done only by qualified personel.
- In the following situations please unplug the appliance from the mains:
- when you defrost completely the appliance;
- when you clean the appliance.

To unplug the appliance, pull by the plug, not by the cable!

- Ensure the minimum space between the appliance and the wall against which it is placed.
- Do not climb on the appliance.
- Do not allow the children to play or hide inside the appliance.
- Never use electric appliances inside the freezer, for defrosting.
- Do not use the appliance near heating appliances, cookers or other sources of heat and fire.
- Do not leave the freezer door open more than it is necessary to put in or take out the food.
- Do not leave the food in the appliance if it is not working.
- Do not keep inside products containing flammable or explosive gases.
- Do not keep inside fizzy drinks (juice, mineral water, champagne, etc.) in the freezer: the bottle can explode! Do not freeze drinks in plastic bottles.
- Do not eat ice cubes or icecream immediately after having taken them out of the freezer because they may cause „freezer burns”.
- Never touch cold metal parts or frozen food with wet hands because your hands can quickly freeze on the very cold surfaces.
- For the protection of the appliance during warehousing and transport, it is provided with spacers between the door and the cabinet (in the front and rear side). These spacers will be removed before putting the appliance into operation.

● Excess deposit of ice on the frame and the baskets should be removed regularly with the plastic scraper provided. Do not use any metal parts to remove the ice.
The presence of this ice build-up makes impossible to close the door correctly.
● If you do not use your appliance for a few days, it is not advisable to switch it off. If you do not use it for a longer period, please proceed as follows :
- unplug the appliance;
- empty the freezer;
- defrost it and clean it;
- leave the door open to avoid the formation of unpleasant smells.
● If your appliance has a lock, keep it locked and store the key in a safe place, out of the reach of children. If you are discarding an appliance with lock, make sure that, is made ineffective. This is very important so as to avoid children being trapped inside, which may cause their loss of life.
● If the supply cord is damaged, it must be replaced by the manufacturer, its service agent or similarly qualified persons in order to avoid a hazard.

Setting up

This appliance was designed to operate at an ambient temperature between $+10^0$C and $+43^0$C (SN-T class). If the ambient temperature is above $+43^0$C, inside the appliance the temperature can increase.
Set up the appliance far from any source of heat and fire. Placing it in a warm room, the direct exposure to sunbeams or near a heat source (heaters, cookers, ovens), will increase the energy consumption and shorten the product life.
• Please observe the following minimun distances:
  • 100 cm from the cookers working with coal or oil;
  • 150 cm from the electric and gas cookers.
• Ensure the free circulation of the air around the appliance, by observing the distances shown in Item 2.
Assemble on the condenser (in the rear side) the supplied spacers. (Item 3).
• Place the appliance in a perfectly even, dry and well ventilated place.
Assemble the supplied accessories.

Electric connection

Your appliance is intended to operate at a single-phase voltage of 230V/50 Hz. Before plugging in the appliance, please make sure that the parameters of the mains in your house (voltage, currect type, frequency) comply to the operation parameters of the appliance.
• The information concerning the supply voltage and the absorbed power is given on the marking label placed in the back side of the freezer.
• The electric installation must comply with the law requirements.
• **The earthing of the appliance is compulsory. The manufacturer has no responsibility for any damage to persons, animals or goods which may arise from the failure to observe the specified conditions.**
• The appliance is endowed with a supply cord and a plug (European type, marked 10/16A) with double earthing contact for safety. If the socket is not the same type with the plug, please ask a specialised electrician to change it.
• Do not use extension pieces or multiple adapters.

Switching off

The switching off must be possible by taking the plug out of the socket or by means of a mains two-poles switch placed before the socket.

Operation

Before putting into operation, clean the inside of the appliance (see chapter „Cleaning").
After finishing this operation please plug in the appliance, adjust the thermostat knob to an average position. The green and red LEDs in the signalling block must light. Leave the appliance work for about 2 hours without putting food inside it.
The freezing of the fresh food is possible after min. 20 hours of operation.

Appliance description

(Item. 1)

1. Door handle
2. Door
3. Lamp housing
4. Baskets
5. Try
6. Lock housing
7. Thermostat box
8. Spacer for transport

Freezer operation

Temperature adjustment
The temperature of the freezer is adjusted by means of the knob assembled on the thermostat (item. 4), position „MAX" being the lowest temperature.
The achieved temperatures can vary according to the conditions of use of the appliance, such as: place of the appliance, ambient temperature, frequency of door opening, extent of filling with food of the freezer. The position of the thermostat knob will change according to these factors. Normally, for an ambient temperature of approx. 32^0C, the thermostat will be adjusted on an average position.

The signalling system is placed on the front side of the freezer (Item 5).
It includes:

1. Thermostat adjustment knob – the inside temperature is adjusted.
2. green LED – shows that the appliance is supplied with electric energy.
3. red LED – damage – lights if the temperature in the freezer is too high. The LED will operate 15-45 minutes after the putting into operation of the freezer, then it must go off. If the LED goes on during the operation, this means that defects have occurred.
4. Orange button– fast freeze – by pushing it the orange led goes on, showing that the appliance entered into the "fast freeze" mode . The exit of this mode is done by pushing the button again, and the orange led goes off.

The three LEDs give information about the mode of operation of the freezer.

Advice for food conservation

The freezer is intended to keep the frozen food for a long time, as well as to freeze fresh food.
One of the main elements for a successful food freezing is the packing.
The main conditions that the packing must fulfill are the following: to be airtight, to be inert towards the packed food, to resist to low temperatures, to be proof to liquids, grease, water vapours, smells, to be able to be washed.
These conditions are fulfilled by the following types of packings: plastic or aluminium film, plastic and aliminium vessels, waxed cardboard glasses or plastic glasses.

IMPORTANT!
- For freezing the fresh food please use the supplied baskets of the appliance.
- Do not place into the freezer a too large quantity of food at a time. The quality of the food is best kept if they are deeply frozen as quickly as possible. This is why it is advisable not to exceed the freezing capacity of the appliance specified in the "Appliance data sheet" (page 7). In order to reduce the freezing time, push the button for „fast freeze".
- The fresh food must not come into contact with the food already frozen.
- The frozen food you have bought can be placed into the freezer without having to adjust the thermostat.
- If the freezing date is not mentioned on the packing, please take into consideration a period of max. 3 months, as a general guide.
- The food, even partially defrosted, cannot be frozen again, it must be consumed immediately or cooked and then refrozen.
- The fizzy drinks will not be kept in the freezer.
- In case of a power failure, do not open the door of the appliance. The frozen food will not be affected if the failure lasts less than 67 hours.

DO NOT FORGET!
After 24 hours since the food was placed inside, please cancel the "fast freeze" mode by pushing again the button 4, when the orange led goes off.

Defrosting of the appliance

- We advise you to defrost the freezer at least twice a year or when the ice layer has an excessive thickness.
- The ice build-up is a normal phenomenon.
- The quantity and the rapidity of ice build-up depends on the ambient conditions and on the frequency of the door opening.
- We advise you to defrost the appliance when the quantity of frozen food is the least.
- Before defrosting, adjust the thermostat knob to a higher position so that the food stores more cold.

- Unplug the appliance.
- Take out the frozen food, wrap it in several sheets of paper and put them in refrigerator or a cool place.
Take the separator panel and put it under the freezer in the direction of the dripping tube. Take out the obstructing plug. The water which results will be collected in the special tray (separator panel). After the melting of the ice and the run-off of the water please wipe with a cloth or with a sponge, then dry well. Put the obstruction plug back in its place. (Item. 6)
For a fast thaw please leave the door open.

Do not use sharp metal objects to remove the ice.
Do not use hairdriers or other electric heating appliances for defrosting.

Inside cleaning

Before starting the cleaning, unplug the appliance from the mains.

- It is advisable to clean the appliance when you defrost it.
- Wash the inside with lukewarm water where you add some neutral detergent. Do not use soap, detergent, gasoline or acetone which can leave a strong odour.
- Wipe with a wet sponge and dry with a soft cloth.

During this operation, avoid the excess of water, in order to prevent its entrance into the thermal insulation of the appliance, which would cause unpleasant odours.
Do not forget to clean also the door gasket especially the bellow ribs, by means of a clean cloth.

Outside cleaning

- Clean the outside of the freezer by means of a sponge soaked in soapy warm water, wipe with a soft cloth and dry.
- The cleaning of the outside part of the refrigerating circuit (motorcompressor, condenser, connection tubes) will be done with a soft brush or with the vacuum-cleaner.

During this operation, please take care not to distort the tubes or detach the cables.
Do not use scouring or abrasive materials !

- After having finished the cleaning, replace the accessories at their places and plug in the appliance.

Replacing the interior light bulb

If the lamp burns out, disconnect the appliance from the mains. Take out the lamp trim. Make sure the lamp is screwed correctly. Plug in the appliance again. If the lamp still does not go on, replace it with another one model E14-15W. Mount back the lamp trim in its place.

Defects finding guide

The appliance does not work.

- There is a power failure.
- The plug of the supply cord is not inserted well into the socket.
- The fuse is blown.
- The thermostat is in **„OFF" position**.

The temperatures are not low enough(red LED on)**.**

- The food prevents the door closing.
- The appliance was not placed correctly.
- The appliance is placed too close to a heat source.
- The thermostat knob is not in the correct position.

Excessive ice build-up

- The door was not closed properly.

The inside lighting does not work

- The lamp is blown. Unplug the appliance from the mains, take out the lamp and replace it with a new one.

The following are not defects

- Possible noddings and cracks coming from the product: circulation of the refrigerant in the system.

Noises during operation

In order to keep the temperature at the value you have adjusted, the compressor of the appliance starts periodically.

The noises which can be heard in such situation are normal.
They are redced as soon as the appliance reaches the operation temperature.

The humming noise is made by the compressor. It can become a little stronger when the compressor starts.

The bubbling and gurgling noises coming from the refrigerant circulating in the pipes of the appliance, are normal operating noises.

Warning !
Never try to repair yourself the appliance or its electric components. Any repair made by an unauthorised person is dangerous for the user and can result in the warranty cancellation.

Appliance data sheet

BRAND	BEKO
MODEL	**BK3136A++CF**
APPLIANCE TYPE	**CHEST FREEZER**
Total gross volume (l)	136
Total useful volume (l)	129
Freezing capacity (kg/24 h)	7
Energy efficiency class (1)	A++
Energy consumption (kWh/an) (2)	132
Autonomy (hours)	67
Noise (dB (A) re 1 pW)	40
Ecological refrigerating agent R600a	
(1) Energy classes: A+++ ... D (A+++ = more economical ... D = less economical) (2) The real power consumption depends on the using conditions and on the appliance location.	

The symbol ▬ on the product or on packaging indicates that this product may not be treated as household waste. Instead it shall be handed over to the applicable collection point for the recycling of electrical and electronic equipment. By ensuring this product is disposed of correctly, you will help prevent potential negative consequences for the environment and human health, which could otherwise be otherwise be caused by inappropriate waste handling of this product. For more detailed information about recycling of this product, please contact your local city office, you household waste disposal service or the shop where you purchased the product.

4578334102
EN

www.beko.com