Oven

User manual

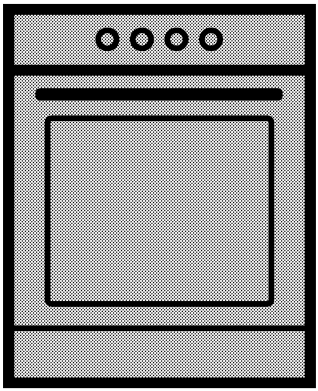

GG 15125 FX PR

EN

485.9305.28/R.AB/23.10.2017/2-1

Please read this user manual first!

Dear Customer,
Thank you for purchasing this Beko product. We hope that you get the best results from your product which has been manufactured with high quality and state-of-the-art technology. Therefore, please read this entire user manual and all other accompanying documents carefully before using the product and keep it as a reference for future use. If you handover the product to someone else, give the user manual as well. Follow all warnings and information in the user manual.
Remember that this user manual is also applicable for several other models. Differences between models will be identified in the manual.

Explanation of symbols

Throughout this user manual the following symbols are used:

	Important information or useful hints about usage.
	Warning of hazardous situations with regard to life and property.
	Warning of electric shock.
	Warning of risk of fire.
	Warning of hot surfaces.

Arçelik A.Ş.
Karaağaç caddesi No:2-6
34445 Sütlüce/Istanbul/TURKEY

Made in TURKEY

CE

This product was manufactured using the latest technology in environmentally friendly conditions.

1 Important instructions and warnings for safety and environment 4

General safety 4
Safety when working with gas....4
Electrical safety 5
Product safety 6
Intended use 8
Safety for children....9
Disposing of the old product 9
Package information 9

2 General information 10

Overview 10
Package contents 11
Technical specifications 13
Injector table 13

3 Installation 14

Before installation 14
Installation and connection 16
Future Transportation....18

4 Preparation 19

Tips for saving energy 19
Initial use....19
First cleaning of the appliance 19
Initial heating....19

5 How to use the hob 20

General information about cooking 20
Using the hobs 20

6 How to operate the oven 22

General information on baking, roasting and grilling22
How to use the gas oven.... 22
Cooking times table.... 23
How to operate the gas grill 24
Cooking times table.... 25

7 Maintenance and care 26

General information.... 26
Cleaning the hob.... 26
Cleaning the control panel 26
Cleaning the oven 26
Removing the oven door 27
Removing the door inner glass 27
Replacing the oven lamp.... 28

8 Troubleshooting 29

1 Important instructions and warnings for safety and environment

This section contains safety instructions that will help protect from risk of personal injury or property damage. Failure to follow these instructions shall void any warranty.

General safety

- This appliance can be used by children aged from 8 years and above and persons with reduced physical, sensory or mental capabilities or lack of experience and knowledge if they have been given supervision or instruction concerning use of the appliance in a safe way and understand the hazards involved.
  Children shall not play with the appliance. Cleaning and user maintenance shall not be made by children without supervision.
- The appliance is not to be used by persons (including children) with reduced physical, sensory or mental capabilities, or lack of experience and knowledge, unless they have been given supervision or instruction.
  Children should be supervised and ensure they do not play with the appliance
- If the product is handed over to someone else for personal use or second-hand use purposes, the user manual, product labels and other relevant documents and parts should be also given.
- Never place the product on a carpet-covered floor. Otherwise, lack of airflow beneath the product will cause electrical parts to overheat. This will cause problems with your product.
- Installation and repair procedures must always be performed by Authorised Service Agents. The manufacturer shall not be held responsible for damages arising from procedures carried out by unauthorised persons which may also void the warranty. Before installation, read the instructions carefully.
- Do not operate the product if it is defective or has any visible damage.
- Ensure that the product function knobs are switched off after every use.

Safety when working with gas

- Any works on gas equipment and systems may only be carried out by authorised qualified persons who are Gas Safe registered.
- Prior to the installation, ensure that the local distribution conditions (nature of the gas and

gas pressure) and the adjustment of the appliance are compatible.

- This appliance is not connected to a combustion products or evacuation device. It shall be installed and connected in accordance with current installation regulations. Particular attention shall be given to the relevant requirements regarding ventilation; See *Before installation, page 14*
- The use of gas cooking appliance results in the production of heat and moisture in the room in which it is installed. Ensure that the kitchen is well ventilated: keep natural ventilation holes open or install a mechanical ventilation device (mechanical extractor hood). Prolonged intensive use of the appliance may call for additional ventilation, for example increasing the level of the mechanical ventilation where present.
- Gas appliances and systems must be regularly checked for proper functioning. Regulator, hose and its clamp must be checked regularly and replaced within the periods recommended by its manufacturer or when necessary.
- Clean the gas burners regularly. The flames should be blue and burn evenly.
- Good combustion is required in gas appliances. In case of incomplete combustion, carbon monoxide (CO) might develop. Carbon monoxide is a colourless, odourless and very toxic gas, which has a lethal effect even in very small doses.
- Request information about gas emergency telephone numbers and safety measures in case of gas smell from you local gas provider.

What to do when you smell gas

- Do not use open flame or do not smoke. Do not operate any electrical buttons (e.g. lamp button, door bell and etc.) Do not use fixed or mobile phones. Risk of explosion and toxication!
- Open doors and windows.
- Turn off all valves on gas appliances and gas meter at the main control valve, unless it's in a confined space or cellar.
- Check all tubes and connections for tightness. If you still smell gas leave the property.
- Warn the neighbours.
- Call the fire-brigade. Use a telephone outside the house.
- Do not re-enter the property until you are told it is safe to do so.

Electrical safety

- If the product has a failure, it should not be operated unless it

is repaired by an Authorised Service Agent. There is the risk of electric shock!

- Only connect the product to a grounded outlet/line with the voltage and protection as specified in the “Technical specifications”. Have the grounding installation made by a qualified electrician while using the product with or without a transformer. Our company shall not be liable for any problems arising due to the product not being earthed in accordance with the local regulations.
- Never wash the product by spreading or pouring water onto it! There is the risk of electric shock!
- Never touch the plug with wet hands! Never unplug by pulling on the cable, always pull out by holding the plug.
- The product must be disconnected during installation, maintenance, cleaning and repairing procedures.
- If the power connection cable for the product is damaged, it must be replaced by the manufacturer, its service agent or similarly qualified persons in order to avoid a hazard.
- The appliance must be installed so that it can be completely disconnected from the mains supply. The separation must be provided by a switch built into the fixed electrical installation, according to construction regulations.
- Rear surface of the oven gets hot when it is in use. Make sure that the gas/electrical connection does not contact the rear surface; otherwise, connections can get damaged.
- Do not trap the mains cable between the oven door and frame and do not route it over hot surfaces. Otherwise, cable insulation may melt and cause fire as a result of short circuit.
- Any work on electrical equipment and systems should only be carried out by authorised and qualified persons.
- In case of any damage, switch off the product and disconnect it from the mains. To do this, turn off the fuse at home.
- Make sure that fuse rating is compatible with the product.

Product safety

- WARNING: The appliance and its accessible parts become hot during use. Care should be taken to avoid touching heating elements. Children less than 8 years of age shall be kept away unless continuously supervised.

- Never use the product when your judgment or coordination is impaired by the use of alcohol and/or drugs.
- Be careful when using alcoholic drinks in your dishes. Alcohol evaporates at high temperatures and may cause fire since it can ignite when it comes into contact with hot surfaces.
- Food Poisoning Hazard: Do not let food sit in oven for more than 1 hour before or after cooking. Doing so can result in food poisoning or sickness.
- Do not place any flammable materials close to the product as the sides may become hot during use.
- During use the appliances becomes hot. Care should be taken to avoid touching heating elements inside the oven.
- Keep all ventilation slots clear of obstructions.
- Do not heat closed tins and glass jars in the oven. The pressure that would build-up in the tin/jar may cause it to burst.
- Do not place baking trays, dishes or aluminium foil directly onto the bottom of the oven. The heat accumulation might damage the bottom of the oven.
- Do not use harsh abrasive cleaners or sharp metal scrapers to clean the oven door glass since they can scratch the surface, which may result in shattering of the glass.
- Do not use steam cleaners to clean the appliance as this may cause an electric shock.
- (Varies depending on the product model.)
  Placing the wire shelf and tray onto the wire racks properly
  It is important to place the wire shelf and/or tray onto the rack properly. Slide the wire shelf or tray between 2 rails and make sure that it is balanced before placing food on it (Please see the following figure).

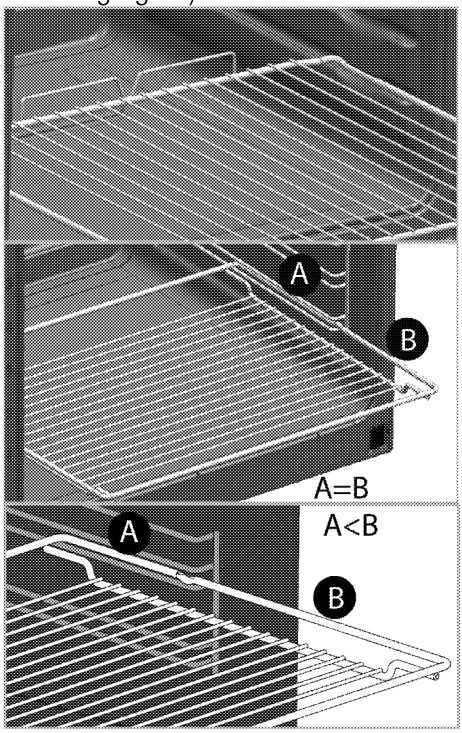

- Do not use the product if the front door glass removed or cracked.
- Do not use the oven handle to hang towels for drying. Do not hang up towel, gloves, or similar textile products when the grill function is at open door.
- Always use heat resistant oven gloves when putting in or removing dishes into/from the hot oven.
- Place the baking paper into the cooking pot or on to the oven accessory (tray, wire grill etc) together with the food and then insert all into the preheated oven. Remove the excess parts of the baking paper overflowing from the accessory or the pot in order to prevent the risk of touching the oven's heating elements. Never use the baking paper in an operating temperature higher than the indicated value for the baking paper. Do not place the baking paper directly on the base of the oven.
- WARNING: Ensure that the appliance is switched off before replacing the lamp to avoid the possibility of electric shock.
- The appliance must not be installed behind a decorative door in order to avoid overheating.
- Product must be placed directly on the floor. It must not be placed onto a base or a pedestal.
- WARNING: Unattended cooking on a hob with fat or oil can be dangerous and may result in fire. NEVER try to extinguish a fire with water, but switch off the appliance and then cover flame e.g. with a lid or a fire blanket.
- CAUTION: The cooking process has to be supervised. A short term cooking process has to be supervised continuously.
- WARNING: Danger of fire: Do not store items on the cooking surfaces.

Prevention against possible fire risk!

- Ensure all electrical connections are secure and tight to prevent risk of arcing.
- Do not use damaged cables or extension cables.
- Ensure liquid or moisture is not accessible to the electrical connection point.
- To prevent gas leakage ensure that the gas connection is sound.

Intended use

- This product is designed for domestic use. Commercial use will void the guarantee.
- This appliance is for cooking purposes only. It must not be used for other purposes, for example room heating.

- This product should not be used for warming the plates under the grill, drying towels, dish cloths etc. by hanging them on the oven door handles. This product should also not be used for room heating purposes.
- The manufacturer shall not be liable for any damage caused by improper use or handling errors.
- The oven can be used for defrosting, baking, roasting and grilling food.

Safety for children

- WARNING: Accessible parts may become hot during use. Young children should be kept away.
- The packaging materials will be dangerous for children. Keep the packaging materials away from children. Please dispose of all parts of the packaging according to environmental standards.
- Electrical and/or gas products are dangerous to children. Keep children away from the product when it is operating and do not allow them to play with the product.
- An additional protective means to avoid contact with the oven door is available. This part should be fitted when young children are likely to be present.
- Do not place any items above the appliance that children may reach for.
- When the door is open, do not load any heavy object on it and do not allow children to sit on it. It may overturn or door hinges may get damaged.

Disposing of the old product

Compliance with the WEEE Directive and Disposing of the Waste Product:

This product complies with EU WEEE Directive (2012/19/EU). This product bears a classification symbol for waste electrical and electronic equipment (WEEE).
This product has been manufactured with high quality parts and materials which can be reused and are suitable for recycling. Do not dispose of the waste product with normal domestic and other wastes at the end of its service life. Take it to the collection center for the recycling of electrical and electronic equipment. Please consult your local authorities to learn about these collection centers.

Compliance with RoHS Directive:
The product you have purchased complies with EU RoHS Directive (2011/65/EU). It does not contain harmful and prohibited materials specified in the Directive.

Package information

- Packaging materials of the product are manufactured from recyclable materials in accordance with our National Environment Regulations. Do not dispose of the packaging materials together with the domestic or other wastes. Take them to the packaging material collection points designated by the local authorities.

2 General information

Overview

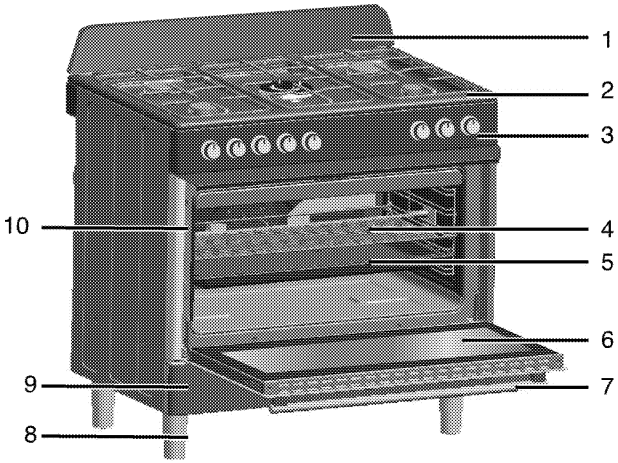

1	Splashback	6	Front door
2	Burner plate	7	Handle
3	Control panel	8	Foot
4	Wire shelf	9	Lower part
5	Tray	10	Shelf positions

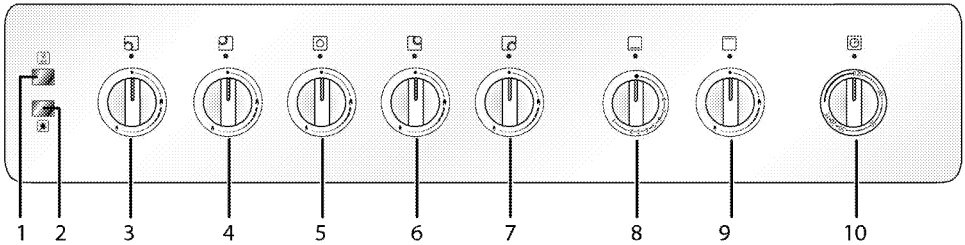

1 Lamp and Turnspit button
2 Ignition button
3 Normal burner Front left
4 Normal burner Rear left
5 Wok burner Middle
6 Rapid burnerRear right
7 Auxiliary burner Front right
8 Oven knob
9 Grill thermostat knob
10 Mechanical timer

Package contents

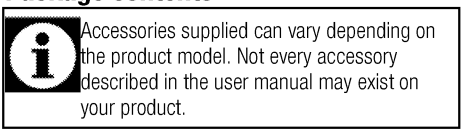

Accessories supplied can vary depending on the product model. Not every accessory described in the user manual may exist on your product.

1. **User manual**
2. **Oven tray**
   Used for pastries, frozen foods and big roasts.

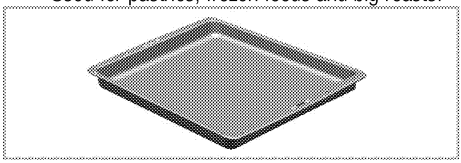

3. **Wire Shelf**
   Used for roasting and for placing the food to be baked, roasted or cooked in casserole dishes to the desired rack.

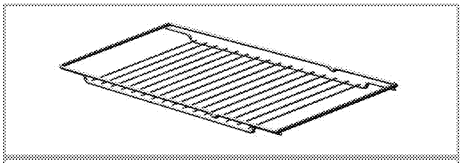

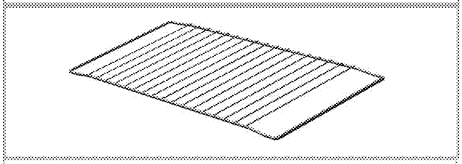

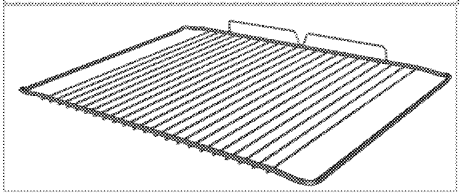

4. **Placing the wire shelf and tray onto the telescopic racks properly**
   (This feature is optional. It may not exist on your product.)
   Telescopic racks allow you to install and remove the trays and wire shelf easily.
   When using the tray and wire shelf with telescopic racks, make sure that the pins at the rear section of the telescopic rack stands against the edges of the wire shelf and tray.

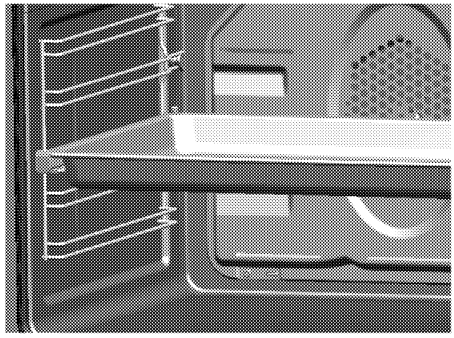

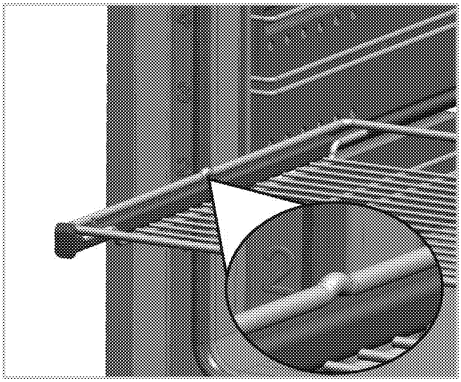

5. **Rotisserie chicken**
   Used to grill meat, poultry and fish evenly from all sides.
   - Fix the food to be grilled to the turn spit with the forks.
   - Insert sharp edge of the turn spit into the driver on the left side of the oven cavity and hang up the other end into the turn spit hook on the right side of the oven cavity.

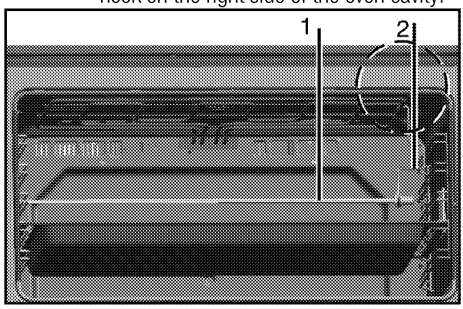

1 Turn spit

2 Turn spit hook

6. **Splash back assembly**

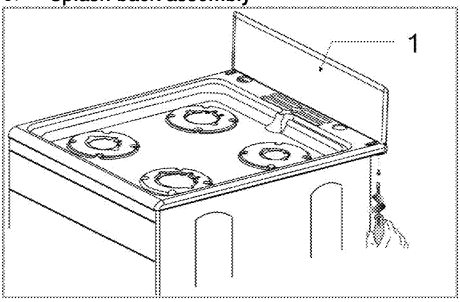

1 Splashback

Please take splashback and package of screws, nuts, fillers form warmer drawer
Place splashback according to the drawing, place nut inside splashback on to the hole, screw the splashback to the burner's plate with screw form under burner plate

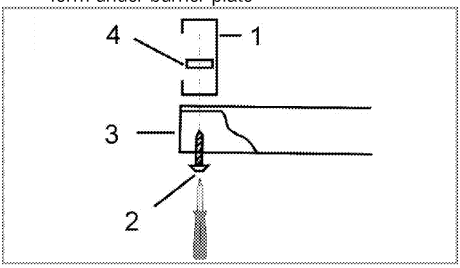

1 Splashback
2 Screw
3 Burner plate
4 Nut

If you don't want to install splashback on to your cooker, you can place fillers to the holes.

Do not overtighten the screws as damage to the hob or splashback could occur.

Inner temperature indicator

Used for only informative about the inner temperature (°C) of oven.

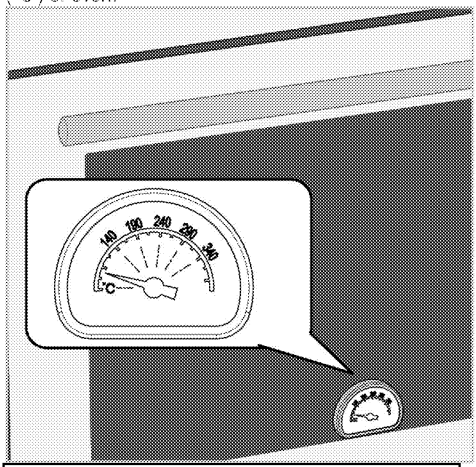

Thermometer is located at the door. The value it shows is 20°C lower when compared to the temperature at the central point of the oven's cooking area.

Measurement tolerance of the thermometer is ±12.5°C.

Technical specifications

GENERAL	
External dimensions (height / width / depth)	850 mm/900 mm/600 mm
Voltage / frequency	220-240 V ~ 60 Hz
Fuse	10 A
Cable type / section	min.H05VV-FG 3 x 0,75 mm^2
Gas type / pressure	LPG G 30/50 mbar
Total gas consumption	18 kW
Converting the gas type / pressure§	LPG G 30/28-30 mbar
– optional	
HOB	
Burners	
Front left	**Normal burner**
Power	2 kW
Rear left	**Normal burner**
Power	2 kW
Middle	**Wok burner**
Power	3.6 kW
Rear right	**Rapid burner**
Power	2.9 kW
Front right	**Auxiliary burner**
Power	1 kW
OVEN/GRILL	
Main oven	**Gas oven**
Inner lamp	15–25 W
Grill power consumption	2.5 kW
Gas consumption of oven	4.0 kW

Technical specifications may be changed without prior notice to improve the quality of the product.

Figures in this manual are schematic and may not exactly match your product.

Values stated on the product labels or in the documentation accompanying it are obtained in laboratory conditions in accordance with relevant standards. Depending on operational and environmental conditions of the product, these values may vary.

Injector table

Position hob zone / Gas type / Gas pressure	2 kW Front left	2 kW Rear left	3.6 kW Middle	2.9 kW Rear right	1 kW Front right
G 30/28-30 mbar	72	72	96	87	50
G 30/50 mbar	60	60	75	75	43

Gas type / Gas pressure	Gas oven	Grill
G 30/28-30 mbar	97	73
G 30/50 mbar	83	65

3 Installation

Product must be installed by a qualified person in accordance with the regulations in force. The manufacturer shall not be held responsible for damages arising from procedures carried out by unauthorized persons which may also void the warranty.

Preparation of location and electrical and gas installation for the product is under customer's responsibility.

DANGER:
The product must be installed in accordance with all local gas and/or electrical regulations.

DANGER:
Prior to installation, visually check if the product has any defects on it. If so, do not have it installed.
Damaged products cause risks for your safety.

Before installation

Please note the product is packed without the feet fitted, therefore please ensure the feet are fitted as per the instructions; see *Installation and connection , page 16* before the appliance is placed in its final position.
To ensure that critical air gaps are maintained under the appliance, we recommend that this appliance is mounted on a solid base and that the feet do not sink into any carpet or soft flooring.
The kitchen floor must be able to carry the weight of the appliance plus the additional weight of cookware and bakeware and food.
If the range is placed on a base, measures have to be taken to prevent the appliance slipping from the base.
The appliances must not be installed behind a decorative door in order to avoid overheating.

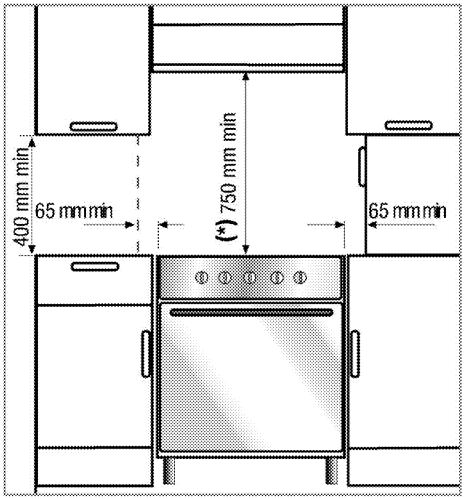

- It can be used with cabinets on either side but in order to have a minimum distance of 400mm above hotplate level allow a side clearance of 65mm between the appliance and any wall, partition or tall cupboard.
- It can also be used in a free standing position. Allow a minimum distance of 750 mm above the hob surface.
- (*) If a cooker hood is to be installed above the cooker, refer to cooker hood manufacturer' instructions regarding installation height (min 650 mm).
- Movement of your appliance is most easily achieved by lifting the front as indicated in the drawing. Open the oven door sufficiently to allow a comfortable and safe grip on the underside of the oven roof avoid causing any damage to the grill element or any internal parts of the oven. Do not move by pulling on the door handle or knobs. Move the appliance a bit at a time until placed in the position required.

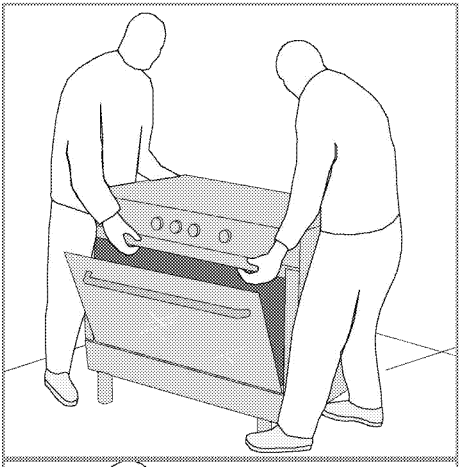

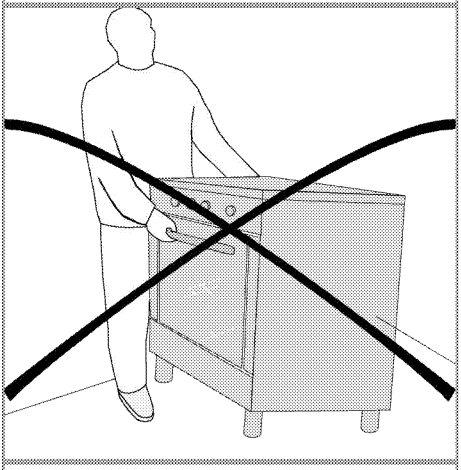

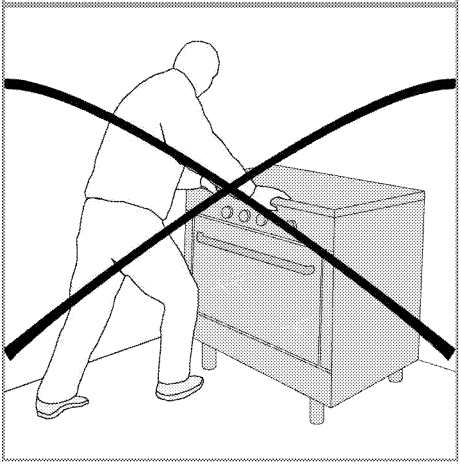

- The appliance corresponds to device class 1, i.e. it may be placed with the rear and **one** side to kitchen walls, kitchen furniture or equipment of any size. The kitchen furniture or equipment on the **other** side may only be of the same size or smaller.
- Any kitchen furniture next to the appliance must be heat-resistant (100 °C min.).

LP Gas Only
Don't install this appliance in a room below ground level unless it is oven to ground level on at least one side.
Failure to install appliances correctly is dangerous and could result in prosecution.

Room ventilation

All rooms require an openable window, or equivalent, and some rooms will require a permanent vent as well. The air for combustion is taken from the room air and the exhaust gases are emitted directly into the room. Good ventilation is essential for safe operation of your appliance.

Rooms with doors and/or windows which open directly to the outer environment

The doors and/or windows that open directly to the outer environment must have a total ventilation opening of the dimensions specified in the table below which is based on the total gas power of the appliance (total gas power consumption of the appliance is shown in the technical specification table of this user manual). If the doors and/or windows do not have a total ventilation opening corresponding to the total gas consumption of the appliance as specified in the table below, then there must definitely be an additional fixed ventilation opening in the room to ensure that the total minimum ventilation requirements for the total gas consumption of the appliance is achieved. The fixed ventilation opening can include openings for existing airbricks, extraction hood ducting opening dimension etc.

Total gas consumption (kW)	min. Ventilation opening (cm^2)
0-2	100
2-3	120
3-4	175
4-6	300
6-8	400
8-10	500
10-11.5	600
11.5-13	700
13-15.5	800
15.5-17	900
17-19	1000

19-24	1250

Rooms that do not have openable doors and/or windows that open directly to the outer environment

If the room where the appliance is installed does not have a door and/or a window that opens directly to the outer environment, other products shall be sought that definitely provide a fixed nonadjustable and non-closable ventilation opening which meets the total minimum ventilation opening requirements for the total gas consumption of the appliance as indicated in the above table.Also the appropriate building regulations advise should be followed.

Where a room or internal space contains more than one gas appliance, additional ventilation area shall be provided on top of the requirement given in the table above. Size of additional ventilation area shall be appropriate to regulations of other gas appliances.

There should also be a minimum clearance of 10mm on the bottom edge of the door that opens to the inner environment in the room where the appliance is installed.You must ensure that items such as carpets and other floorcoverings etc., do not affect the clearance when the door is closed.

The cooker may be located in a kitchen, kitchen/diner or a bed-sitting room, but not in a room containing a bath or a shower. The cooker must not be installed in a bed-siting room of less than 20m^3.

Do not install this appliance in a room below ground level unless it is open to ground level on at least one side.

Installation and connection

Product can only be installed and connected in accordance with the statutory installation rules.

Do not install the product next to refrigerators or freezers. The heat emitted by the product will increase the energy consumption of cooling appliances.

- Carry the product with at least two persons.
- Product must be placed directly on the floor. It must not be placed onto a base or a pedestal.

Do not use the door and/or handle to carry or move the product. The door, handle or hinges get damaged.

Electrical connection

Connect the product to a grounded outlet/line protected by a miniature circuit braker of suitable capacity as stated in the "Technical specifications" table. Have the grounding installation made by a qualified electrician while using the product with or without a transformer. Our company shall not be liable for any damages that will arise due to using the product without a grounding installation in accordance with the local regulations.

DANGER:
The product must be connected to the mains supply only by an authorised and qualified person. The product's warranty period starts only after correct installation.
Manufacturer shall not be held responsible for damages arising from procedures carried out by unauthorised persons.

DANGER:
The power cable must not be clamped, bent or trapped or come into contact with hot parts of the product.
A damaged power cable must be replaced by a qualified electrician. Otherwise, there is risk of electric shock, short circuit or fire!

The mains supply data must correspond to the data specified on the type label of the product. The rating plate is either seen when the door or the lower cover is opened or it is located at the rear wall of the unit depending on the unit type.

Power cable of your product must comply with the values in "Technical specifications" table.

Power cable plug must be within easy reach after installation (do not route it above the hob).

While performing the wiring, you must apply with the national/local electrical regulations and must use the appropriate socket outlet/line and plug for oven. In case of the product's power limits are out of current carrying capability of plug and socket outlet/line, the product must be connected through fixed electrical installation directly without using plug and socket outlet/line.

DANGER:
Before starting any work on the electrical installation, disconnect the product from the mains supply.
There is the risk of electric shock!

Connect the power cable into the socket.

Gas connection

DANGER:
Product can be connected to gas supply system only by an authorised and qualified person or technician with licence.
Risk of explosion or toxication due to unprofessional repairs!
Manufacturer shall not be held responsible for damages arising from procedures carried out by unauthorised or unlicensed persons.

DANGER:
Before starting any work on the gas installation, disconnect the gas supply.
There is the risk of explosion!

- Gas adjustment conditions and values are stated on labels (or ion type label).

Your product is equipped for liquefied petroleum gas (LPG).

Connecting the gas hose

- Have your product connected in a way that it will be close to the gas connection and not gas leakage will exist.
- Plastic hose to be used must not be longer than 125 cm.
- Install the clamp to the hose. Soak one end of the hose (15 mm inner diameter) into boiling water for one minute to soften it.
- Than, slip the softened end of the hose completely onto the sharp hose tip of your product. Finally, tighten the clamp completely with a screwdriver.
- Repeat the same procedure for the other end of the hose and complete the gas cylinder connection.
- Never forget to make the gas leakage control.

DANGER:
Risk of explosion and suffocation!
Do not keep LPG cylinders in home.

- If you need to use your product later with a different type of gas, you must consult the Authorised Service Agent for the related conversion procedure.

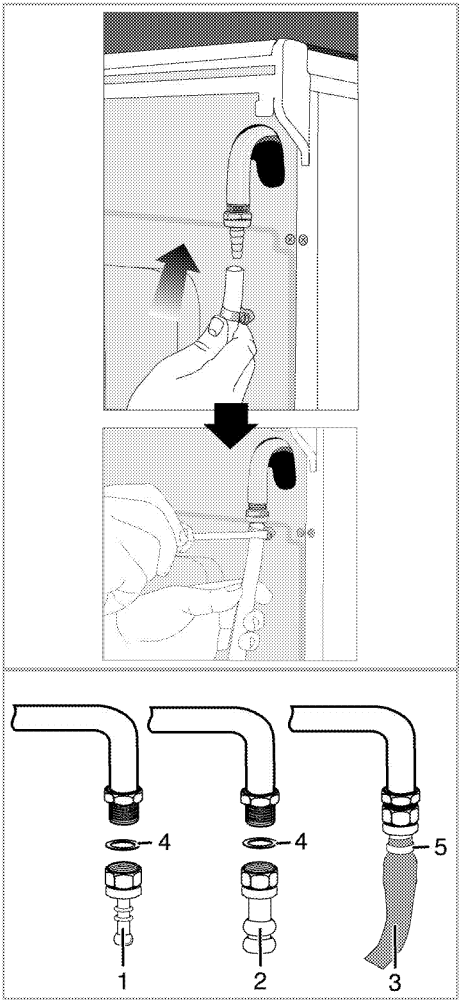

1 Hose tip-LPG
2 Hose tip-NG
3 Safety hose
4 O-ring (gasket)
5 Clamp

Leakage control at the connection point

- Make sure that all knobs on the product are turned off. Make sure that the gas supply is open. Prepare soapy foam and apply it onto the connection point of the hose for gas leakage control.
- Soapy part will froth if there is a gas leakage. In this case, inspect the gas connection once again.

Never use a match or lighter to make the gas leakage control.

DANGER:
The gas hose must not be clamped, bent or trapped or come into contact with hot parts of the product.
There is the risk of explosion due to damaged gas hose.

- Push the product towards the kitchen wall.
- **Adjusting the feet of oven**
  4 feet are supplied together with your oven.
  Each foot must be installed into respective slots located at 4 corners under the oven.
  Screw the thread of the foot by turning in clockwise.
  For your safety, make sure that they are level when screwing all 4 feet. Unbalance of the legs has negative influence on cooking.

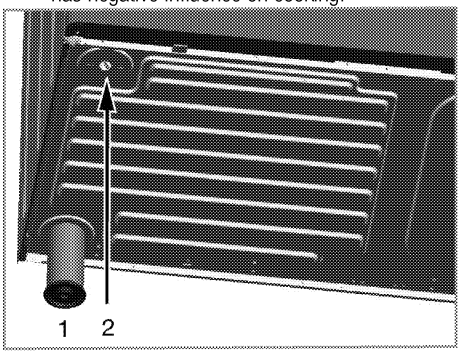

1 Foot

2 Foot slot

Final check

1. Check electrical functions.
2. Open gas supply.
3. Check gas installations for secure fitting and tightness.
4. Ignite burners and check appearance of the flame.

Flame must be blue and have a regular shape. If the flame is yellowish, check if the burner cap is seated securely or clean the burner.

Future Transportation

- Keep the product's original carton and transport the product in it. Follow the instructions on the carton. If you do not have the original carton, pack the product in bubble wrap or thick cardboard and tape it securely.
- To prevent the wire grill and tray inside the oven from damaging the oven door, place a strip of cardboard onto the inside of the oven door that lines up with the position of the trays. Tape the oven door to the side walls.
- Secure the caps and pan supports with adhesive tape.
- Do not use the door or handle to lift or move the product.

Do not place any objects onto the product and move it in upright position.

Check the general appearance of your product for any damages that might have occurred during transportation.

4 Preparation

Tips for saving energy

The following information will help you to use your appliance in an ecological way, and to save energy:

- Use dark coloured or enamel coated cookware in the oven since the heat transmission will be better.
- While cooking your dishes, perform a preheating operation if it is advised in the user manual or cooking instructions.
- Do not open the door of the oven frequently during cooking.
- Try to cook more than one dish in the oven at the same time whenever possible. You can cook by placing two cooking vessels onto the wire shelf.
- Cook more than one dish one after another. The oven will already be hot.
- Defrost frozen dishes before cooking them.
- Use pots/pans with cover for cooking. If there is no cover, energy consumption may increase 4 times.
- Select the burner which is suitable for the bottom size of the pot to be used. Always select the correct pot size for your dishes. Larger pots require more energy.

Initial use

First cleaning of the appliance

The surface might get damaged by some detergents or cleaning materials.
Do not use aggressive detergents, cleaning powders/creams or any sharp objects during cleaning.
Do not use harsh abrasive cleaners or sharp metal scrapers to clean the oven door glass since they can scratch the surface, which may result in shattering of the glass.

1. Remove all packaging materials.
2. Wipe the surfaces of the appliance with a damp cloth or sponge and dry with a cloth.

Initial heating

Heat up the product for about 30 minutes and then switch it off. Thus, any production residues or layers will be burnt off and removed.

WARNING
Hot surfaces cause burns!
Product may be hot when it is in use. Never touch the hot burners, inner sections of the oven, heaters and etc. Keep children away. Always use heat resistant oven gloves when putting in or removing dishes into/from the hot oven.

Gas oven

1. Take all baking trays and the wire grill out of the oven.
2. Close the oven door.
3. Select the highest flame of the gas oven; see *How to use the gas oven, page 22*.
4. Operate the oven about 30 minutes.
5. Turn off your oven; See *How to use the gas oven, page 22*

Grill oven

1. Take all baking trays and the wire grill out of the oven.
2. Close the oven door.
3. Select the highest flame of the grill oven; see *How to operate the gas grill, page 24*.
4. Operate the oven about 30 minutes.
5. Turn off your grill; see *How to operate the gas grill, page 24*

Smoke and smell may emit for a couple of hours during the initial operation. This is quite normal. Ensure that the room is well ventilated to remove the smoke and smell. Avoid directly inhaling the smoke and the smell that emits.

5 How to use the hob

General information about cooking

Never fill the pan with oil more than one third of it. Do not leave the hob unattended when heating oil. Overheated oils bring risk of fire. **Never attempt to extinguish a possible fire with water!** When oil catches fire, cover it with a fire blanket or damp cloth. Turn off the hob if it is safe to do so and call the fire department.

- Before frying foods, always dry them well and gently place into the hot oil. Ensure complete thawing of frozen foods before frying.
- Do not cover the vessel you use when heating oil.
- Place the pans and saucepans in a manner so that their handles are not over the hob to prevent heating of the handles. Do not place unbalanced and easily tilting vessels on the hob.
- Do not place empty vessels and saucepans on cooking zones that are switched on. They might get damaged.
- Operating a cooking zone without a vessel or saucepan on it will cause damage to the product. Turn off the cooking zones after the cooking is complete.
- As the surface of the product can be hot, do not put plastic and aluminum vessels on it. Such vessels should not be used to keep foods either.
- Use flat bottomed saucepans or vessels only.
- Put appropriate amount of food in saucepans and pans. Thus, you will not have to make any unnecessary cleaning by preventing the dishes from overflowing.
  Do not put covers of saucepans or pans on cooking zones.
  Place the saucepans in a manner so that they are centered on the cooking zone. When you want to move the saucepan onto another cooking zone, lift and place it onto the cooking zone you want instead of sliding it.

Gas cooking

- Size of the vessel and the flame must match each other. Adjust the gas flames so that they will not extend the bottom of the vessel and center the vessel on saucepan carrier.

Using the hobs

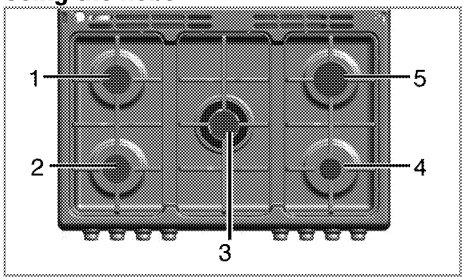

1 Normal burner 20-22 cm
2 Normal burner 20-22 cm
3 Wok burner 22–24 cm
4 Auxiliary burner12-18 cm
5 Rapid burner 22–24 cm is list of advised diameter of pots to be used on related burners.

Large flame symbol indicates the highest cooking power and small flame symbol indicates the lowest cooking power. In turned off position (top), gas is not supplied to the burners.

Igniting the gas burners

1. Keep burner knob pressed.
2. Turn it counter clockwise to large flame symbol.

» Gas is ignited with the spark created.

3. Adjust it to the desired cooking power.

Turning off the gas burners

Turn the keep warm zone knob to off (upper) position.

Gas shut off safety system (in models with thermic component)

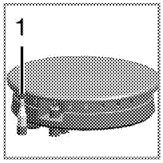

1. Gas shut off safety

As a counter measure against blow out due to fluid overflows at burners, safety mechanism trips and shuts off the gas.

- Push the knob inwards and turn it counter clockwise to ignite.
- After the gas ignites, keep the knob pressed for 3-5 seconds more to engage the safety system.
- If the gas does not ignite after you press and release the knob, repeat the same procedure by keeping the knob pressed for 15 seconds.

DANGER:
Release the button if the burner is not ignited within 15 seconds.
Wait at least 1 minute before trying again.
There is the risk of gas accumulation and explosion!

Wok burner

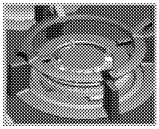

Wok burners help you to cook faster. Wok, which is particularly used in Asian kitchen is a kind of deep and flat fry-pan made of sheet metal, which is used to cook minced vegetable and meat at strong flame in a short time.
Since meals are cooked at strong flame and in a very short time in such fry-pans that conduct the heat rapidly and evenly, the nutrition value of the food is preserved and vegetables remain crispy.
You can use wok burner for regular saucepans as well.

6 How to operate the oven

General information on baking, roasting and grilling

WARNING
Hot surfaces cause burns!
Product may be hot when it is in use. Never touch the hot burners, inner sections of the oven, heaters and etc. Keep children away. Always use heat resistant oven gloves when putting in or removing dishes into/from the hot oven.

DANGER:
Be careful when opening the oven door as steam may escape.
Exiting steam can scald your hands, face and/or eyes.

Tips for baking

- Use non-sticky coated appropriate metal plates or aluminum vessels or heat-resistant silicone moulds.
- Make best use of the space on the rack.
- Place the baking mould in the middle of the shelf.
- Select the correct rack position before turning the oven or grill on. Do not change the rack position when the oven is hot.
- Keep the oven door closed.

Tips for roasting

- Treating whole chicken, turkey and large piece of meat with dressings such as lemon juice and black pepper before cooking will increase the cooking performance.
- It takes about 15 to 30 minutes longer to roast meat with bones when compared to roasting the same size of meat without bones.
- Each centimeter of meat thickness requires approximately 4 to 5 minutes of cooking time.
- Let meat rest in the oven for about 10 minutes after the cooking time is over. The juice is better distributed all over the roast and does not run out when the meat is cut.
- Fish should be placed on the middle or lower rack in a heat-resistant plate.

Tips for grilling

When meat, fish and poultry are grilled, they quickly get brown, have a nice crust and do not get dry. Flat pieces, meat skewers and sausages are particularly suited for grilling as are vegetables with high water content such as tomatoes and onions.

- Distribute the pieces to be grilled on the wire shelf or in the baking tray with wire shelf in such a way that the space covered does not exceed the size of the heater.
- Slide the wire shelf or baking tray with grill into the desired level in the oven. If you are grilling on the wire shelf, slide the baking tray to the lower rack to collect fats. Add some water in the tray for easy cleaning.

Foods that are not suitable for grilling carry the risk of fire. Only grill food which is suitable for intensive grilling heat.
Do not place the food too far in the back of the grill. This is the hottest area and fatty food may catch fire.

How to use the gas oven

Product is equipped with a security valve. When the flame goes out, gas supply is cut automatically. Thus, gas accumulation is prevented.

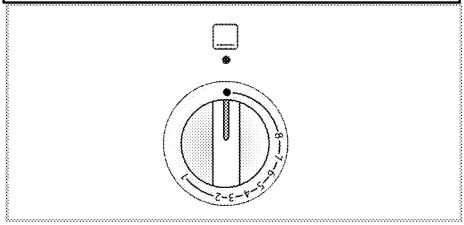

The gas oven is operated by the gas oven control knob. In off position (top) the gas supply is Off.

Switch on the gas oven

The gas oven is ignited with the ignition button.

1. Open oven door.
2. Keep gas oven control knob pressed and turn it **counterclockwise**.
3. Press ignition button and release it again.
4. Keep the gas oven control knob pressed for 3 to 5 seconds.

» Repeat the process until the emanating gas is ignited.

5. Keep the gas oven control knob pressed for another 3 to 5 seconds. Be sure that gas has ignited and flame is present.
6. Select the desired baking power/ gas mark.

7. If there is no electricity; ignite the gas with the gas lighter from the ignition control hole.

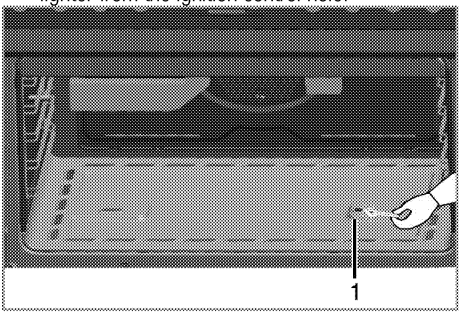

1 Ignition control hole

DANGER:
There is the risk of gas compression and explosion!
Do not attempt to ignite the gas more that 15 seconds. If the burner is not ignited within 15 seconds, turn off the knob and wait for 1 minute. Ventilate the room before reattempting to ignite the burner. There is the risk of gas compression and explosion!

Switch off the gas oven

1. Turn gas oven control knob to off position (top).

Gas level temperature chart

Gas level	1	2	3	4	5	6	7	8
Temperature °C	165	170	173	175	185	195	225	250

Using the clock as an alarm

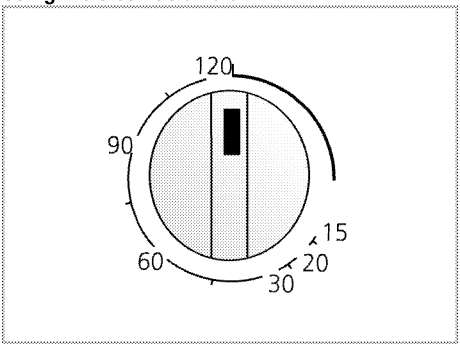

The alarm clock has no influence on the functions of the oven. It is only used as a warning. For example, this is useful when you want to turn food in the oven at a certain point of time. Alarm clock will give a signal once the time you set is over.

Setting the alarm clock

1. Turn the Time Adjustment knob clockwise to determine for how long the alarm will sound.
2. The knob will turn counterclockwise at the end of the cooking time and the alarm will sound. Alarm clock does not turn off the oven.

Turn the Function knob counter clockwise to off position to turn off the oven.

Cooking times table

1st rack of the oven is the **bottom** rack.

Maximum load capacity of oven tray: 4 kg (8.8 lb).

The timings in this chart are meant as a guide. Timings may vary due to temperature of food, thickness, type and your own preference of cooking.

Stand dishes on a baking sheet to prevent spillages onto oven base and help keep oven clean.

Baking and roasting

Food	Preheating *	Insertion level	Control knob position	Cooking time
Grape pie	10 min.	4...5	4...5	25...30 min.
Apple pie	10 min.	4...5	4...5	20...30 min.
Fruit tart	10 min.	4...5	3...4	25...30 min.
Pie	10 min.	4...5	3...4	30...40 min.
Cookies	-	5	2...3	25...35 min.
Pastry	10 min.	4...5	4...5	25...35 min.
Cake	10 min.	4	1...2	50 min.
Biscuits	10 min.	5	1...2	20...30 min.
Roast lamb	10 min.	4...5	7...8	25...30 min. per 450 g + 30 min.
Roast Beef	10 min.	3...4	8	30...35 min. per 450 g + 30 min.

Turkey	10 min.	2	7...8	50...60 min. per 450 g + 30 min.
Poultry	10 min.	2	7...8	25...30 min. per 450 g + 25 min.
Casseroles	–	4	6...7	90...120 min. $
Fish	10 min.	3	6...7	30...40 min.
Macaroni	10 min.	4	2...3	20 min.
Small cakes	10 min.	4	1...2	45 min.
Victoria sandwich	10 min.	4	4...5	22...28 min.

*** at control knob position 7 / $ depending on quantity / # depending on size**

How to operate the gas grill

Product is equipped with a security valve. When the flame goes out, gas supply is cut automatically. Thus, gas accumulation is prevented.

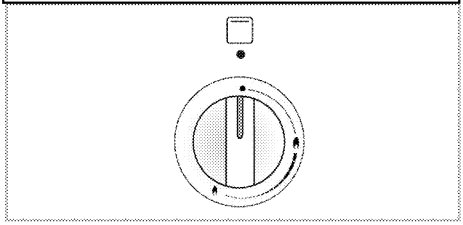

Grill is operated with Grill control knob. In turned off position (top), gas is not supplied.

WARNING
Hot surfaces may cause burns! Keep children away from the product.
Oven door remains slightly inclined when opened full and thus, possible splashes to not reach you.

WARNING
Close oven door during grilling.
Hot surfaces may cause burns!

Switching on the grill

Gas grill is ignited with the ignition button.

1. Open the oven door.
2. Keep the knob pressed and turn it **counterclockwise** to the Grill symbol.
3. Press and release the ignition button.

» Repeat the procedure until the gas is ignited.

4. Keep the knob pressed for 3 to 5 seconds more.
5. Make sure that the grill is ignited.
6. If the electricity is cut-off, ignite the grill burner with a lighter or match.

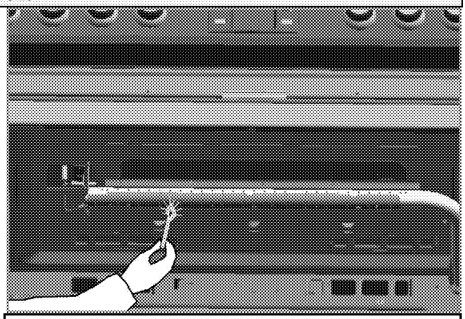

DANGER:
There is the risk of gas compression and explosion!
Do not attempt to ignite the gas more that 15 seconds. If the burner is not ignited within 15 seconds, turn off the knob and wait for 1 minute. Ventilate the room before reattempting to ignite the burner. There is the risk of gas compression and explosion!

Switching off the grill

1. Turn the Grill control knob to Off (upper) position.

Foods that are not suitable for grilling carry the risk of fire. Only grill food which is suitable for intensive grilling heat.
Do not place the food too far in the back of the grill. This is the hottest area and fatty food may catch fire.

Turnspit function

Used to grill meat, poultry and fish evenly from all sides.

After selecting the Grill function, press Turn Spit button.

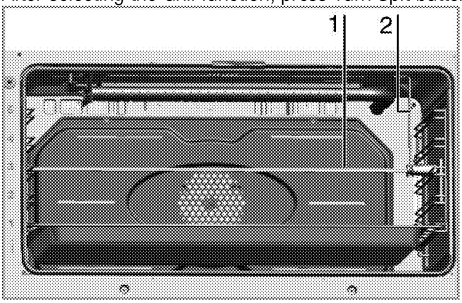

1 Turnspit

2 Turn spit hook

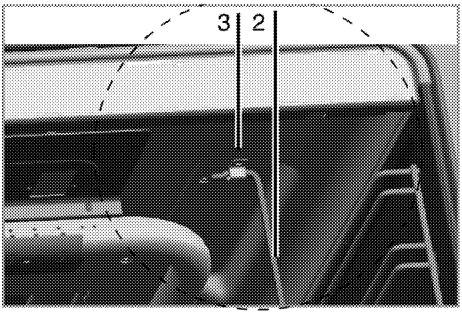

3 Turnspit slot

- Fix the food to be grilled to the turn spit with the forks.
- Insert the turn spit into the driver on the left side of the oven cavity and hang up the other end into the turn spit hook on the right side of the oven cavity.
  Make sure that the turn spit hook is inserted into the turn spit slot.
- Place a tray to one of the lower racks in order to collect the fats. Put some water into the tray for ease of cleaning.
- **Do not forget to remove the plastic handle of the turn spit.**
- When cooking completes, attach the plastic handle and remove your food from the oven.

Maximum weight of a chicken or turkey that will be cooked with rotisserie function can not exceed 5 kg.

Cooking times table

The timings in this chart are meant as a guide. Timings may vary due to temperature of food, thickness, type and your own preference of cooking.

1st rack of the oven is the **bottom** rack.

Grilling with gas grill

Food	Preparation/setting	Grilling time #
Toasting of bread products	.....	3...10 min.
Small cuts of meat, sausages, bacon, etc.	.....	15...20 min.
Chops, gammon steaks, chicken pieces, etc.	Chicken with wire rack in upturned position.	20...25 min.
Whole fish, fish fillets, fish fingers	Whole fish and fish fillets placed in the base of the grill pan.	10...20 min.
Fish in breadcrumbs	.....	15...20 min.
Pre-cooked potato products	.....	15...20 min.
Pizza	Placed in the base of the grill pan.	12...15 min.
Grilling/browning of food	Dish placed directly on the base of the grill compartment.	8...10 min.
# depending on size resp. thickness		

7 Maintenance and care

General information

Service life of the product will extend and the possibility of problems will decrease if the product is cleaned at regular intervals.

DANGER:
Disconnect the product from mains supply before starting maintenance and cleaning works.
There is the risk of electric shock!

DANGER:
Allow the product to cool down before you clean it.
Hot surfaces may cause burns!

- Clean the product thoroughly after each use. In this way it will be possible to remove cooking residues more easily, thus avoiding these from burning the next time the appliance is used.
- No special cleaning agents are required for cleaning the product. Use warm water with washing liquid, a soft cloth or sponge to clean the product and wipe it with a dry cloth.
- Always ensure any excess liquid is thoroughly wiped off after cleaning and any spillage is immediately wiped dry.
- Do not use cleaning agents that contain acid or chloride to clean the stainless or inox surfaces and the handle. Use a soft cloth with a liquid detergent (not abrasive) to wipe those parts clean, paying attention to sweep in one direction.

The surface might get damaged by some detergents or cleaning materials.
Do not use aggressive detergents, cleaning powders/creams or any sharp objects during cleaning.
Do not use harsh abrasive cleaners or sharp metal scrapers to clean the oven door glass since they can scratch the surface, which may result in shattering of the glass.

Do not use steam cleaners to clean the appliance as this may cause an electric shock.

Cleaning the hob

Gas hobs

1. Remove and clean the saucepan carriers and burner caps.
2. Clean the hob.
3. Install the burner caps and make sure that they are seated correctly.
4. When installing the upper grills, pay attention to place the saucepan carriers so that the burners are centered.

Cleaning the control panel

Clean the control panel and knobs with a damp cloth and wipe them dry.

If your product is equipped with buttons/knobs do not remove the control buttons/knobs to clean the control panel.
Control panel may get damaged!

Cleaning the oven

To clean the side wall

(This feature is optional. It may not exist on your product.)

1. Remove the front section of the side rack by pulling it in the opposite direction of the side wall.
2. Remove the side rack completely by pulling it towards you.

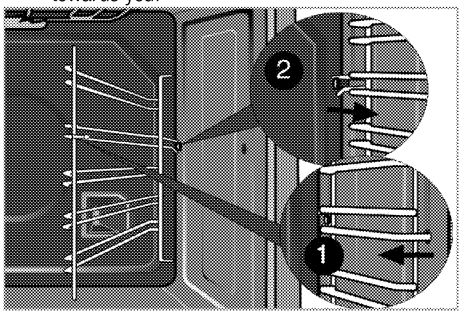

Catalytic walls

(This feature is optional. It may not exist on your product.)

The inner side walls (A) and/or the rear wall (B) of your product may be coated with catalytic enamel. Catalytic walls have a light matte colour and a porous surface. Catalytic walls of the oven should not be cleaned. Porous surfaces of the catalytic walls are automatically cleaned by absorbing and converting the spilled oil (steam and carbon dioxide).

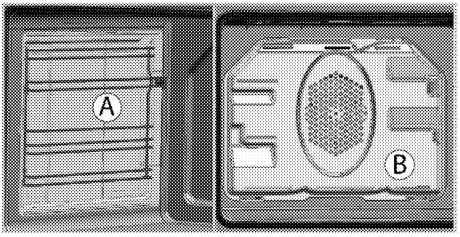

Clean oven door

To clean the oven door, use warm water with washing liquid, a soft cloth or sponge to clean the product and wipe it with a dry cloth.

> Don't use any harsh abrasive cleaners or sharp metal scrapers for cleaning the oven door. They could scratch the surface and destroy the glass.

Removing the oven door

1. Open the front door (1).
2. Open the clips at the hinge housing (2) on the right and left hand sides of the front door by pressing them down as illustrated in the figure.

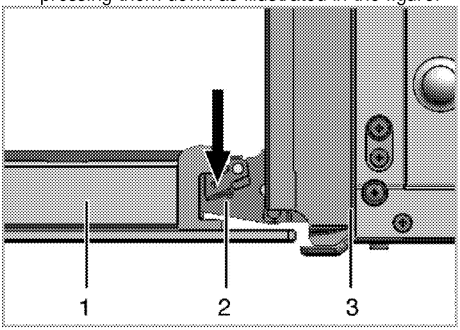

1 Front door
2 Hinge
3 Oven

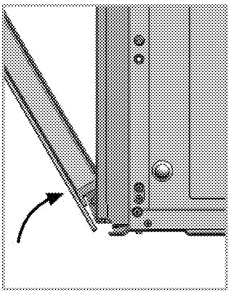

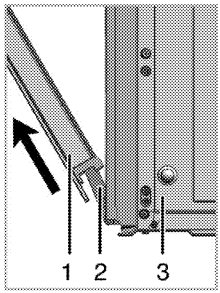

3. Move the front door to half-way.
4. Remove the front door by pulling it upwards to release it from the right and left hinges.

> Steps carried out during removing process should be performed in reverse order to install the door. Do not forget to close the clips at the hinge housing when reinstalling the door.

Removing the door inner glass

(This feature is optional. It may not exist on your product.)

The inner glass panel of the oven door can be removed for cleaning.

1. Open the oven door.
2. Remove the metal part (1) by removing the screws that secure it.
3. To remove the plastic holders (2) , use a flat metal or plastic, e.g., a knife, slotted screwdriver, to free the fixing foot (5).
4. Push the fixing foot through the window (6) in arrow direction.

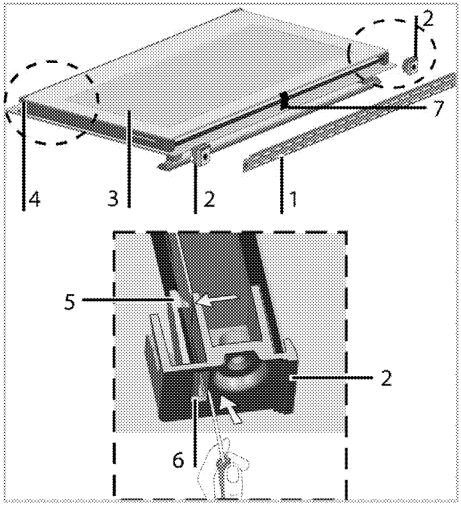

1 Metal part
2 Plastic carrier
3 Inner glass panel
4 Lower plastic slot
5 Fixing foot
6 Window
7 Part of glass holder

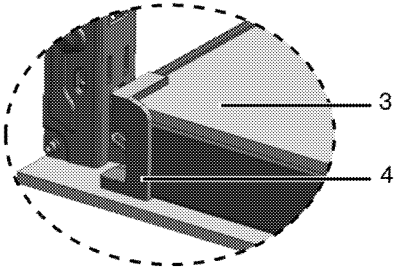

5. Pull the part of glass holder (7) in middle toward yourself to release the inner glass panels.
6. Pull the inner glass panel (3) towards yourself until it detaches from its plastic slots (4).
7. Pull Innermost glass panel towards yourself until it detaches from its plastic slots (4) like inner glass panel.
8. When reinstalling the glass panel, make sure that it is seated into the plastic slots.

Do not forget the put it back the part of glass holder to its place.

Replacing the oven lamp

DANGER:
Before replacing the oven lamp, make sure that the product is disconnected from mains and cooled down in order to avoid the risk of an electrical shock.
Hot surfaces may cause burns!

The oven lamp is a special electric light bulb that can resist up to 300 °C. See *Technical specifications, page 13* for details. Oven lamps can be obtained from Authorised Service Agents or technician with licence.

Position of lamp might vary from the figure.

The lamp used in this appliance is not suitable for household room illumination. The intended purpose of this lamp is to assist the user to see foodstuffs.

The lamps used in this appliance have to withstand extreme physical conditions such as temperatures above 50 °C.

If your oven is equipped with a round lamp:

1. Disconnect the product from mains.
2. Turn the glass cover counter clockwise to remove it.

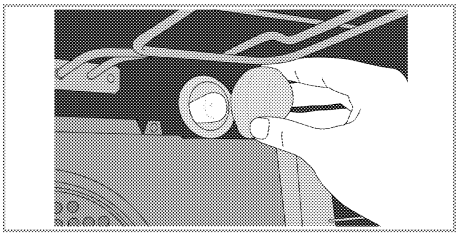

3. If your oven lamp is of type (A) shown in the figure below, remove it by rotating as shown and replace it. If it is of type (B), pull and remove it as shown in the figure and replace it.

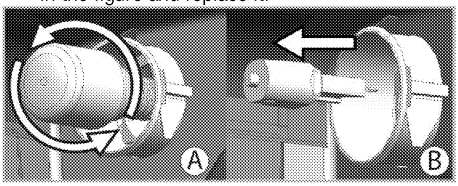

4. Install the glass cover.

8 Troubleshooting

Oven emits steam when it is in use.

- It is normal that steam escapes during operation. >>> *This is not a fault.*

Product emits metal noises while heating and cooling.

- When the metal parts are heated, they may expand and cause noise. >>> *This is not a fault.*

Product does not operate.

- The mains fuse is defective or has tripped. >>> *Check fuses in the fuse box. If necessary, replace or reset them.*
- Product is not plugged into the (grounded) socket. >>> *Check the plug connection.*

There is no ignition spark.

- No current. >>> *Check fuses in the fuse box.*
- Time is not set. >>> *Set the time.*

There is no gas.

- Main gas valve is closed. >>> *Open gas valve.*
- Gas pipe is bent. >>> *Install gas pipe properly.*

Burners are not burning properly or at all.

- Burners are dirty. >>> *Clean burner components.*
- Burners are wet. >>> *Dry the burner components.*
- Burner cap is not mounted safely. >>> *Mount the burner cap properly.*
- Gas valve is closed. >>> *Open gas valve.*
- Gas cylinder is empty (when using LPG). >>> *Replace gas cylinder.*

(In models with timer) Clock display is blinking or clock symbol is on.

- A previous power outage has occurred. >>> *Adjust the time / Switch of the product and switch it on again.*

Consult the Authorised Service Agent or technician with licence or the dealer where you have purchased the product if you can not remedy the trouble although you have implemented the instructions in this section. Never attempt to repair a defective product yourself.