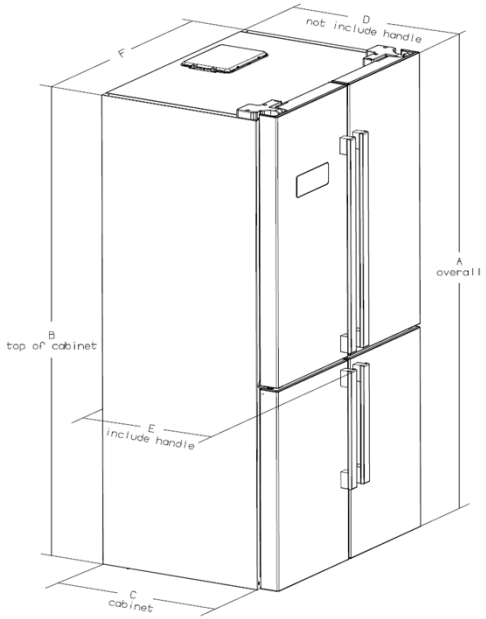
D
not include handle
F
A
overall
B
top of cabinet
E
include handle
C
cabinet

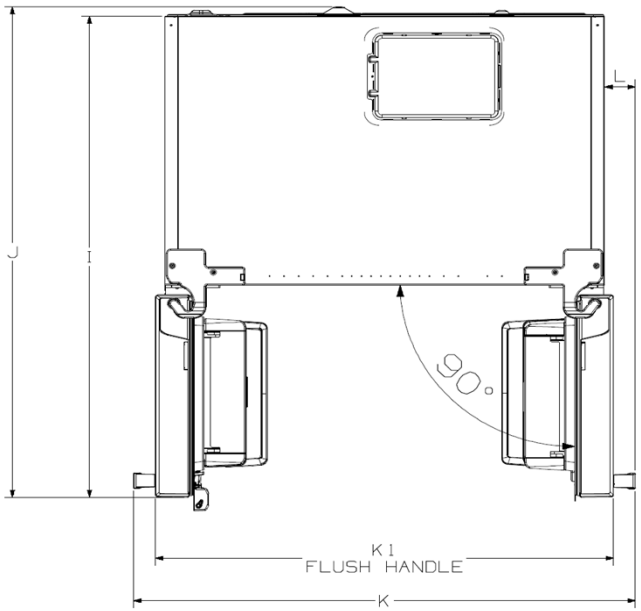
L
J
I
90°
K1
FLUSH HANDLE
K

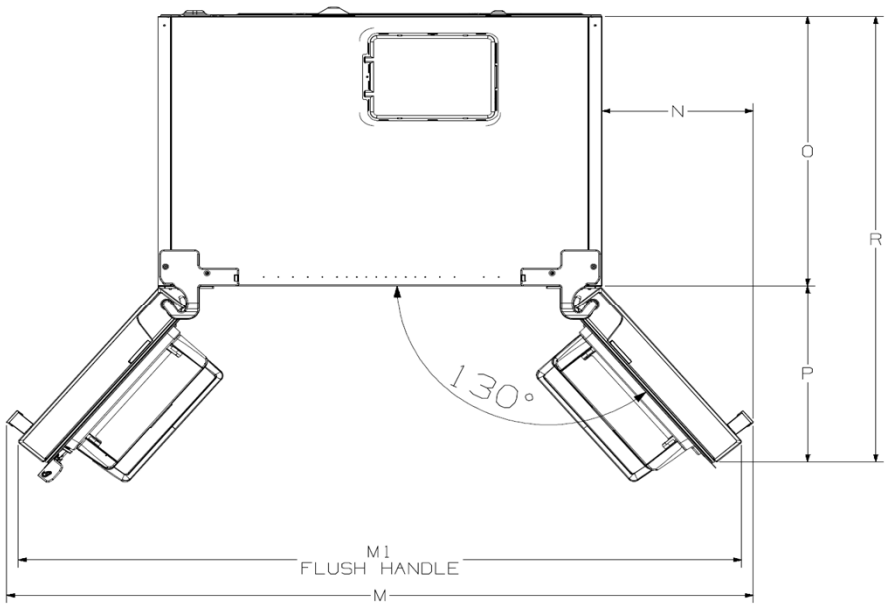
N
O
R
P
130°
M1
FLUSH HANDLE
M