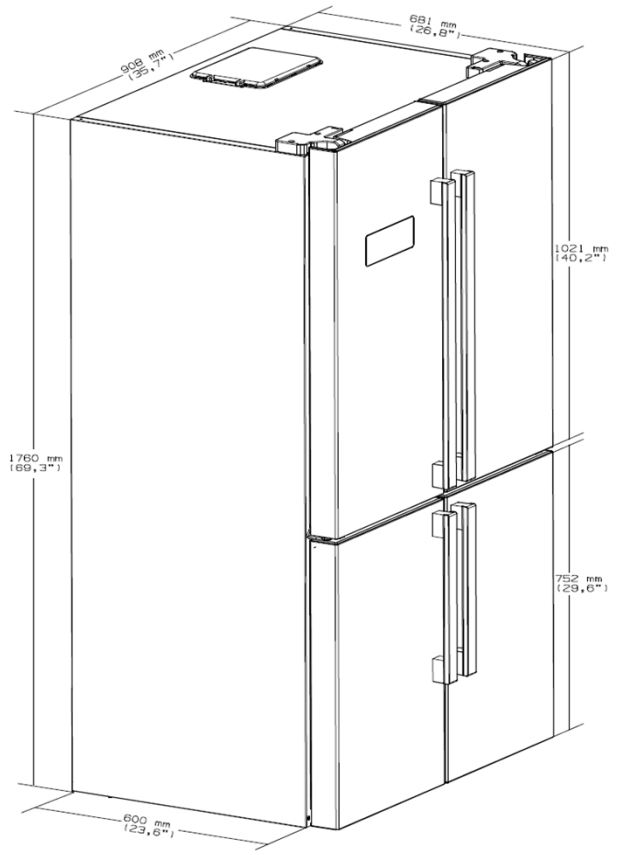
681 mm
(26,8")
908 mm
(35,7")
1021 mm
(40,2")
1760 mm
(69,3")
752 mm
(29,6")
600 mm
(23,6")

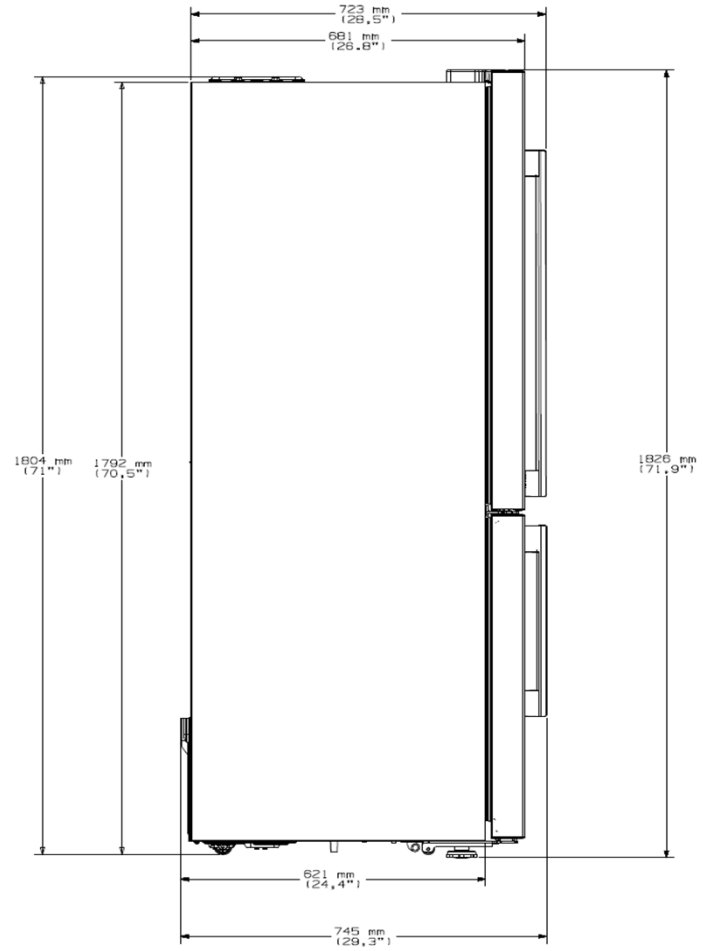
723 mm
(28,5")
681 mm
(26,8")
1804 mm
(71")
1792 mm
(70,5")
1826 mm
(71,9")
621 mm
(24,4")
745 mm
(29,3")

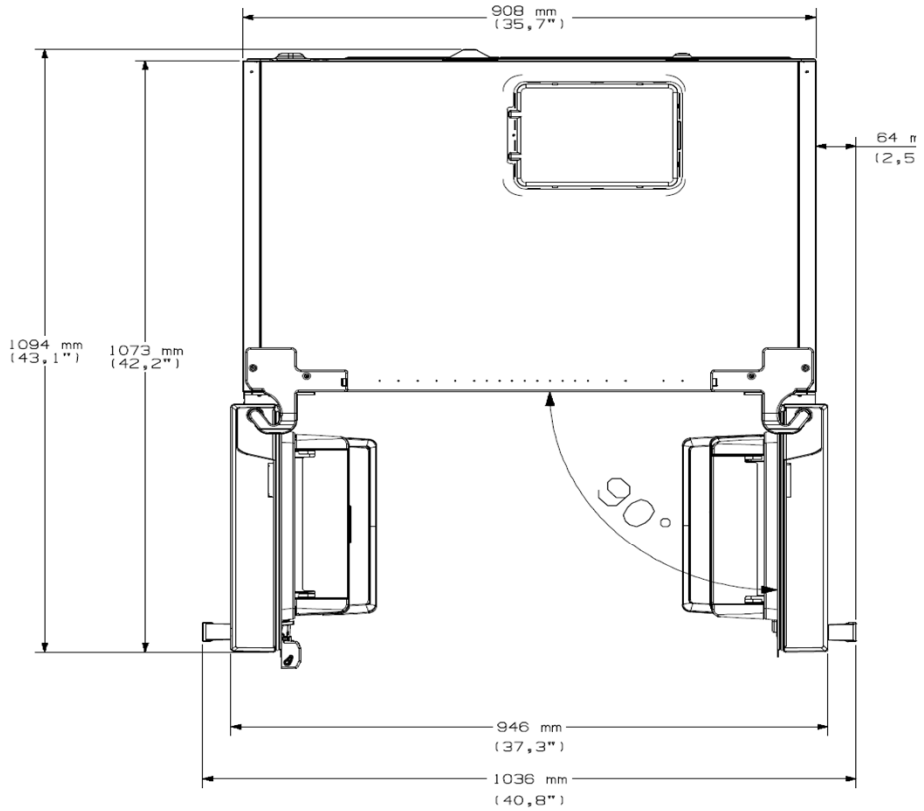
908 mm
(35,7")
64 m
(2,5
1094 mm
(43,1")
1073 mm
(42,2")
90°
946 mm
(37,3")
1036 mm
(40,8")

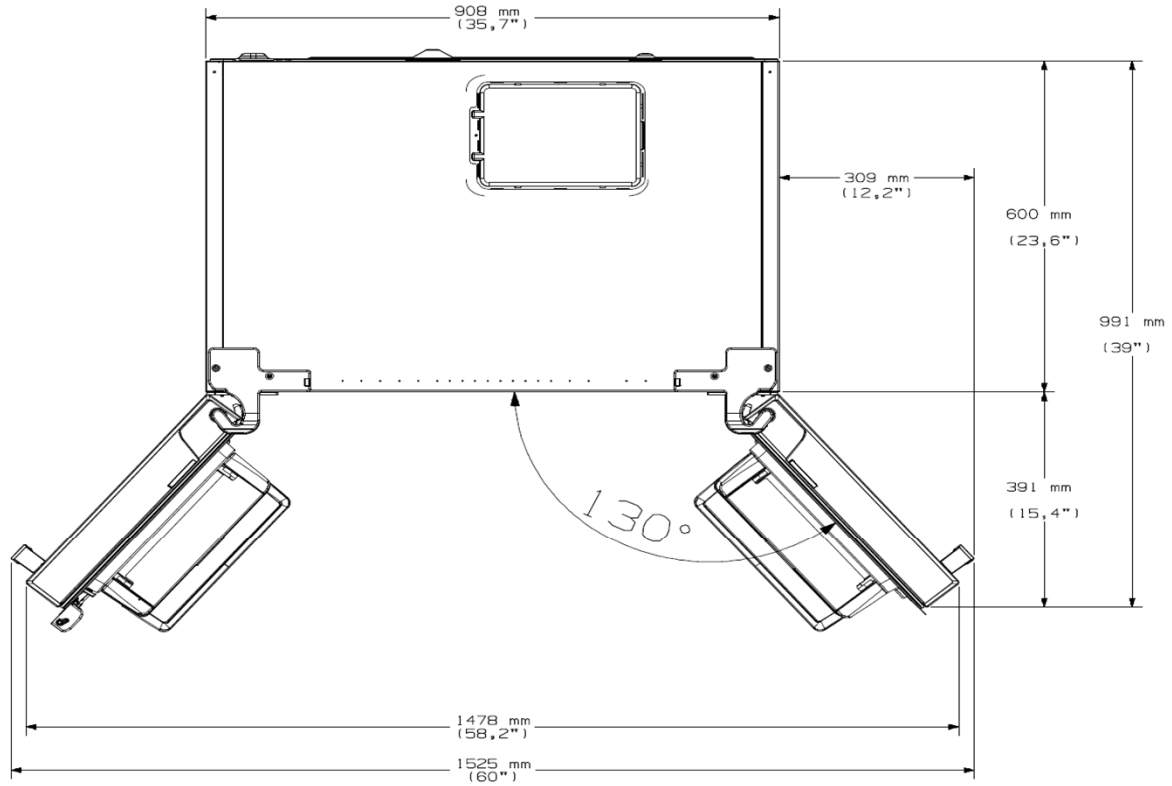
908 mm
(35,7")
309 mm
(12,2")
600 mm
(23,6")
991 mm
(39")
391 mm
(15,4")
130°
1478 mm
(58,2")
1525 mm
(60")