Oven

User Manual

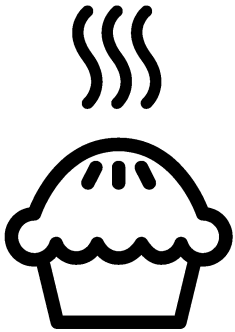

BFC916GMX1

EN

485.9305.44/R.AI/14.01.2020
7757587720

Please read this user manual first!

Dear Customer,
Thank you for purchasing this Beko product. We hope that you get the best results from your product which has been manufactured with high quality and state-of-the-art technology. Therefore, please read this entire user manual and all other accompanying documents carefully before using the product and keep it as a reference for future use. If you handover the product to someone else, give the user manual as well. Follow all warnings and information in the user manual.
Remember that this user manual is also applicable for several other models. Differences between models will be identified in the manual.

Explanation of symbols
Throughout this user manual the following symbols are used:

Important information or useful hints about usage.

Warning of hazardous situations with regard to life and property.

Warning of electric shock.

Warning of risk of fire.

Warning of hot surfaces.

Arçelik A.Ş.
Karaağaç caddesi No:2-6
34445 Sütlüce/Istanbul/TURKEY
Made in TURKEY

1 Important instructions and warnings for safety and environment 4

General safety....4
Safety when working with gas....4
Electrical safety....5
Product safety....6
Intended use....8
Safety for children....8
Disposing of the old product....9
Package information....9
Future Transportation....9

2 General information 10

Overview....10
Package contents....11
Technical specifications....13
Injector table....14

3 Installation 15

Before installation....15
Installation and connection....20
Gas conversion....27

4 Preparation 29

Tips for saving energy....29
Time setting....29
First cleaning of the appliance....29
Initial heating....30

5 How to use the hob 31

General information about cooking....31
Using the hobs....31

6 How to operate the oven 33

General information on baking, roasting and grilling....33
How to operate the electric oven....33
Operating modes....34
Using the oven clock....35
» The time you have set will be activated in a short....37
Cooking times table....37
How to operate the grill....38
Cooking times table for grilling....38

7 Maintenance and care 39

General information....39
Cleaning the hob....39
Cleaning the control panel....39
Cleaning the oven....39
To clean the side wall....39
Removing the oven door....40
Removing the door inner glass....41
Replacing the oven lamp....42

8 Troubleshooting 43

1 Important instructions and warnings for safety and environment

This section contains safety instructions that will help protect from risk of personal injury or property damage. Failure to follow these instructions shall void any warranty.

General safety

- The appliance is not intended for use by persons (including children) with reduced physical, sensory or mental capabilities, or lack of experience and knowledge, unless they have been given supervised or instruction concerning use of the appliance by a responsible person for their safely.
- Young children should be supervised to ensure that they do not play with the appliance.
- Never place the product on a carpet-covered floor. Otherwise, lack of airflow beneath the product will cause electrical parts to overheat. This will cause problems with your product.
- Installation and repair procedures must always be performed by Authorized Service Agents. The manufacturer shall not be held responsible for damages arising from procedures carried out by unauthorized persons which may also void the warranty. Before installation, read the instructions carefully.
- Do not operate the product if it is defective or has any visible damage.
- Ensure that the product function knobs are switched off after every use.

Safety when working with gas

- Any works on gas equipment and systems may only be carried out by authorised qualified persons who are Gas Safe registered.
- Prior to the installation, ensure that the local distribution conditions (nature of the gas and gas pressure) and the adjustment of the appliance are compatible.
- This appliance is not connected to a combustion products or evacuation device. It shall be installed and connected in accordance with current installation regulations. Particular attention shall be given to the relevant requirements regarding ventilation; See *Before installation, page 15*
- The use of gas cooking appliance results in the production of heat and moisture in the room in which it is installed. Ensure that the kitchen is well ventilated: keep

natural ventilation holes open or install a mechanical ventilation device (mechanical extractor hood). Prolonged intensive use of the appliance may call for additional ventilation, for example increasing the level of the mechanical ventilation where present.

- Gas appliances and systems must be regularly checked for proper functioning. Regulator, hose and its clamp must be checked regularly and replaced within the periods recommended by its manufacturer or when necessary.
- Clean the gas burners regularly. The flames should be blue and burn evenly.
- Good combustion is required in gas appliances. In case of incomplete combustion, carbon monoxide (CO) might develop. Carbon monoxide is a colourless, odourless and very toxic gas, which has a lethal effect even in very small doses.
- Request information about gas emergency telephone numbers and safety measures in case of gas smell from you local gas provider.

What to do when you smell gas

- Do not use open flame or do not smoke. Do not operate any electrical buttons (e.g. lamp button, door bell and etc.) Do not use fixed or mobile phones. Risk of explosion and toxication!
- Open doors and windows.
- Turn off all valves on gas appliances and gas meter at the main control valve, unless it's in a confined space or cellar.
- Check all tubes and connections for tightness. If you still smell gas leave the property.
- Warn the neighbours.
- Call the fire-brigade. Use a telephone outside the house.
- Do not re-enter the property until you are told it is safe to do so.

Electrical safety

- If the product has a failure, it should not be operated unless it is repaired by an Authorized Service Agent. There is the risk of electric shock!
- Only connect the product to a grounded outlet/line with the voltage and protection as specified in the “Technical specifications”. Have the grounding installation made by a qualified electrician while using the product with or without a transformer. The manufacturer shall not be liable for any problems arising due to the product not being earthed in accordance with the local regulations.

- Never wash the product by spreading or pouring water onto it! There is the risk of electric shock!
- The product must be disconnected during installation, maintenance, cleaning and repairing procedures.
- If the power connection cable for the product is damaged, it must be replaced by the manufacturer, its service agent or similarly qualified persons in order to avoid a hazard.
- Only use the connection cable specified in the “Technical specifications”.
- The appliance must be installed so that it can be completely disconnected from the mains supply. The separation must be provided by a switch built into the fixed electrical installation, according to construction regulations.
- If the electrical supply is restricted, means of all-pole disconnection must be accessible and incorporated in the fixed wiring in accordance with the wiring rules.
- Rear surface of the oven gets hot when it is in use. Make sure that the gas/electrical connection does not contact the rear surface; otherwise, connections can get damaged.
- Do not trap the mains cable between the oven door and frame and do not route it over hot surfaces. Otherwise, cable insulation may melt and cause fire as a result of short circuit.
- Any work on electrical equipment and systems should only be carried out by authorized and qualified persons.
- In case of any damage, switch off the product and disconnect it from the mains. To do this, turn off the fuse at home.
- Make sure that fuse rating is compatible with the product.

Product safety

- The appliance and its accessible parts become hot during use. Care should be taken to avoid touching heating elements. Children less than 8 years of age shall be kept away unless continuously supervised.
- Never use the product when your judgment or coordination is impaired by the use of alcohol and/or drugs.
- Be careful when using alcoholic drinks in your dishes. Alcohol evaporates at high temperatures and may cause fire since it can ignite when it comes into contact with hot surfaces.
- Do not place any flammable materials close to the product as

the sides may become hot during use.

- During use the appliance becomes hot. Care should be taken to avoid touching heating elements inside the oven.
- Keep all ventilation slots clear of obstructions.
- Do not heat closed tins and glass jars in the oven. The pressure that would build-up in the tin/jar may cause it to burst.
- Do not place baking trays, dishes or aluminium foil directly onto the bottom of the oven. The heat accumulation might damage the bottom of the oven.
- Do not use harsh abrasive cleaners or sharp metal scrapers to clean the oven glass door since they can scratch the surface, which may result in shattering of the glass.
- Do not use a steam cleaner to clean this appliance.
- (Varies depending on the product model.)
  Placing the wire shelf and tray onto the wire racks properly
  It is important to place the wire shelf and/or tray onto the rack properly. Slide the wire shelf or tray between 2 rails and make sure that it is balanced before placing food on it (Please see the following figure).

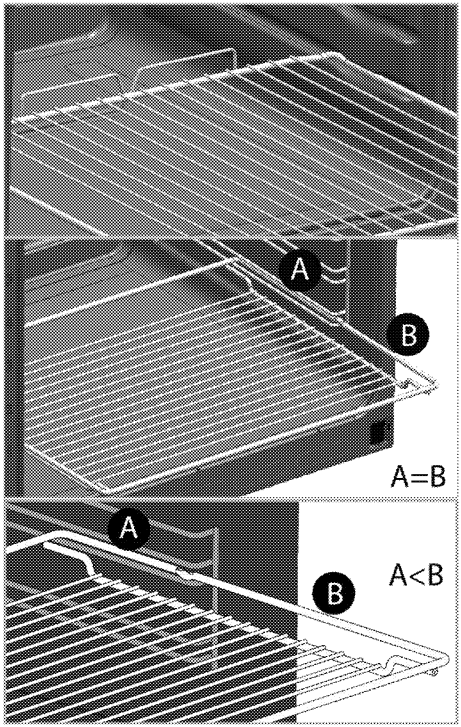

- Do not use the product if the front door glass removed or cracked.
- Do not use the oven handle to hang towels for drying. Do not hang up towel, gloves, or similar textile products when the grill function is at open door.
- Always use heat resistant oven gloves when putting in or removing dishes into/from the hot oven.
- If this appliance is installed on a base, measures must be taken to prevent the appliance from slipping from the base.
- WARNING: Unattended cooking on a hob with fat or oil can be dangerous and may result in fire.

NEVER try to extinguish a fire with water, but switch off the appliance and then cover flame e.g. with a lid or a fire blanket.

- Danger of fire: Do not store items on the cooking surfaces.
- CAUTION: The cooking process has to be supervised. A short term cooking process has to be supervised continuously.
- WARNING: Ensure the appliance is switched off before replacing the lamp to avoid the possibility of electric shock.
- This appliance is not intended to be operated by means of an external timer or separate remote-control system.
- This appliance must not be installed behind a decorative door.

Prevention against possible fire risk!

- Ensure all electrical connections are secure and tight to prevent risk of arcing.
- Do not use damaged cables or extension cables.
- Ensure liquid or moisture is not accessible to the electrical connection point.
- To prevent gas leakage ensure that the gas connection is sound.

Intended use

- This product is designed for domestic use. Commercial use will void the guarantee.
- This appliance is for cooking purposes only. It must not be used for other purposes, for example room heating.
- This product should not be used for warming the plates under the grill, drying towels, dish cloths etc. by hanging them on the oven door handles. This product should also not be used for room heating purposes.
- The manufacturer shall not be liable for any damage caused by improper use or handling errors.
- The oven can be used for defrosting, baking, roasting and grilling food.

Safety for children

- WARNING: Accessible parts will become hot when in use. To avoid burns and scalds, young children should be kept away.
- WARNING: Accessible parts may become hot when the grill in use. Children should be kept away.
- The packaging materials will be dangerous for children. Keep the packaging materials away from children. Please dispose of all parts of the packaging according to environmental standards.
- Electrical and/or gas products are dangerous to children. Keep children away from the product when it is operating and do not

allow them to play with the product.

- Do not place any items above the appliance that children may reach for.
- When the door is open, do **not** load any heavy object on it and do **not** allow children to sit on it. It may overturn or door hinges may get damaged.

Disposing of the old product

Compliance with the WEEE Directive and Disposing of the Waste Product:

This product complies with EU WEEE Directive (2012/19/EU). This product bears a classification symbol for waste electrical and electronic equipment (WEEE).
This product has been manufactured with high quality parts and materials which can be reused and are suitable for recycling. Do not dispose of the waste product with normal domestic and other wastes at the end of its service life. Take it to the collection center for the recycling of electrical and electronic equipment. Please consult your local authorities to learn about these collection centers.

Compliance with RoHS Directive:
The product you have purchased complies with EU RoHS Directive (2011/65/EU). It does not contain harmful and prohibited materials specified in the Directive.

Package information

- Packaging materials of the product are manufactured from recyclable materials in accordance with our National Environment Regulations. Do not dispose of the packaging materials together with the domestic or other wastes. Take them to the packaging material collection points designated by the local authorities.

Future Transportation

- Keep the product's original carton and transport the product in it. Follow the instructions on the carton. If you do not have the original carton, pack the product in bubble wrap or thick cardboard and tape it securely.
- To prevent the wire grill and tray inside the oven from damaging the oven door, place a strip of cardboard onto the inside of the oven door that lines up with the position of the trays. Tape the oven door to the side walls.
- Secure the caps and pan supports with adhesive tape.
- Do not use the door or handle to lift or move the product.

Do not place any objects onto the product and move it in upright position.
Check the general appearance of your product for any damages that might have occurred during transportation.

2 General information

Overview

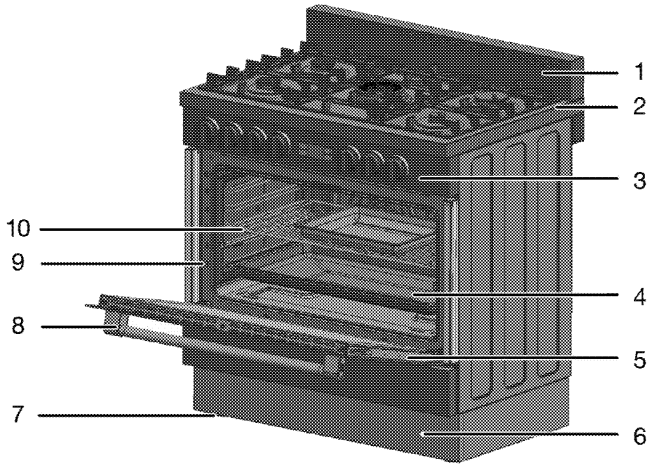

1	Splashback	6	Bottom part
2	Burner plate	7	Foot
3	Control panel	8	Handle
4	Tray	9	Shelf positions
5	Front door	10	Wire shelf

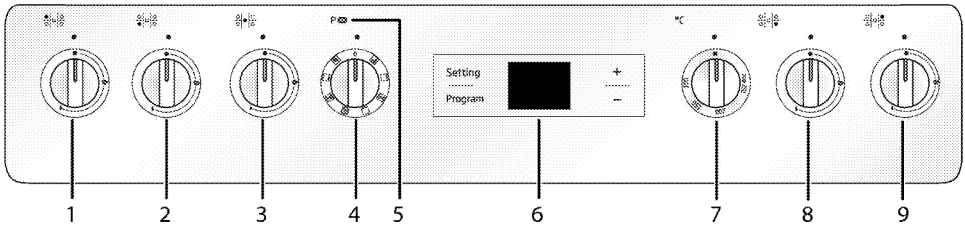

1	Normal burner Rear left	6	Digital timer
2	Normal burner Front left	7	Thermostat knob
3	Wok burner Middle	8	Auxiliary burner Front right
4	Oven knob	9	Rapid burner Rear right
5	Thermostat lamp		

Package contents

Accessories supplied can vary depending on the product model. Not every accessory described in the user manual may exist on your product.

1. User manual
2. Oven tray
   Used for pastries, frozen foods and big roasts.

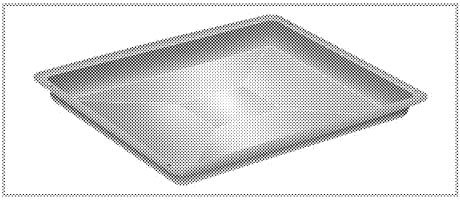

3. Wire Shelf
   Used for roasting and for placing the food to be baked, roasted or cooked in casserole dishes to the desired rack.

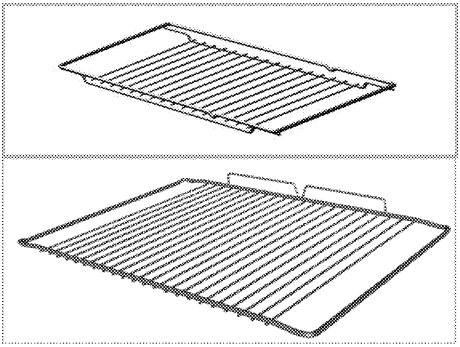

4. Small wire shelf
   It is placed into the tray (if supplied) in order to collect the dripping fat while grilling so that the oven is kept clean.

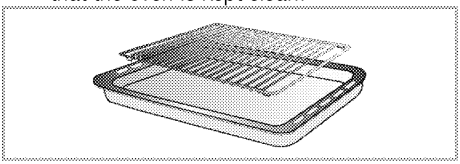

5. Placing the wire shelf and tray onto the telescopic racks properly
   (This feature is optional. It may not exist on your product.)
   Telescopic racks allow you to install and remove the trays and wire shelf easily. When using the tray and wire shelf with telescopic racks, make sure that the pins at the rear section of the telescopic rack stands against the edges of the wire shelf and tray.

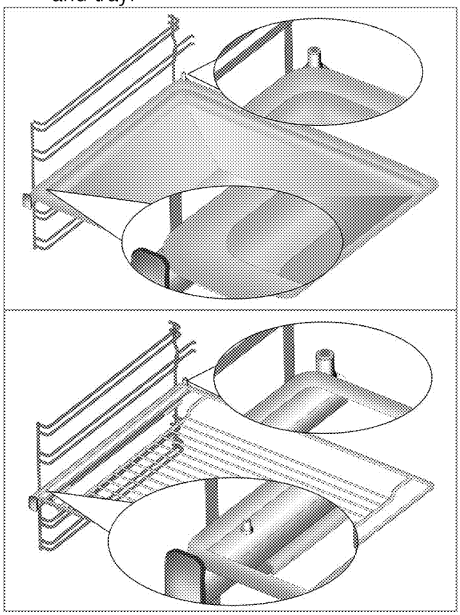

6. Wok pan adaptor

Used for hosting a wok pan with a round bottom.

7. Splash back assembly

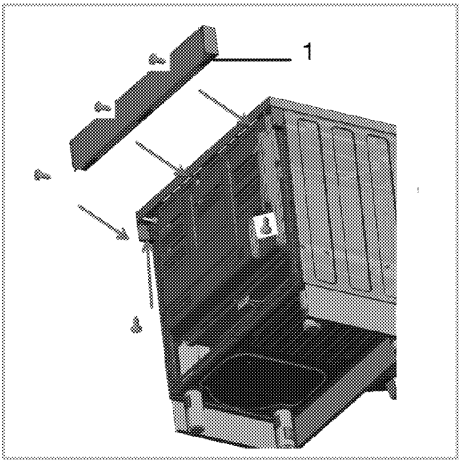

1 Splashback

- Remove the splash back from the packaging taking care to retain the 5 screws required for fixing the splash back to the hob.
  Position the splash back as shown.

Secure the splash back to the hob with screws provided. Do not over tighten the screws as damage to the hob or splash back could occur.

Technical specifications

GENERAL	
External dimensions (height / width / depth)	875 mm (min) - 930 mm max/894 mm/611 mm
Voltage / frequency	220-240 V ~ 50 Hz
Total elect power consumption	3.1 kW
Fuse	16 A
Cable type / section	H05VV-FG 3 x 1,5 mm^2
Cable length	max. 2 m
Gas type/pressure	Natural gas 1.0 kPa
Total gas consumption	**Natural gas 46.5 MJ/h - Universal LPG 45.1 MJ/h**
Conversion to gas type/pressure[§]	Universal LPG 2.75 kPa
HOB	
Burners	
Rear left	**Normal burner**
Power	7,2 Mj/h NG / 7,2 Mj/h LPG
Front left	**Normal burner**
Power	7,2 Mj/h NG / 7,2 Mj/h LPG
Middle	**Wok burner**
Power	18,0 MJ/h NG / 17,0 MJ/h LPG
Rear right	**Rapid burner**
Power	10,5 MJ/h NG / 10,5 MJ/h LPG
Front right	**Auxiliary burner**
Power	3,6 MJ/h NG / 3,2 MJ/h LPG
OVEN/GRILL	
	Multifunction oven
Inner lamp	240 V/15–25 W/E14 SES/T 300 °C
Grill power consumption	2.5 kW

[#] Basics: Information on the energy label of electrical ovens is given in accordance with the EN 60350-1 / IEC 60350-1 standard. Those values are determined under standard load with bottom-top heater or fan assisted heating (if any) functions.
Energy efficiency class is determined in accordance with the following prioritization depending on whether the relevant functions exist on the product or not. 1-Cooking with eco-fan, 2- Turbo slow cooking, 3- Turbo cooking, 4- Fan assisted bottom/top heating, 5-Top and bottom heating.

Technical specifications may be changed without prior notice to improve the quality of the product.

Figures in this manual are schematic and may not exactly match your product.

Values stated on the product labels or in the documentation accompanying it are obtained in laboratory conditions in accordance with relevant standards. Depending on operational and environmental conditions of the product, these values may vary.

This cooker has been designed and constructed in accordance with the following codes and regulations:

- AS/NZS 5263.1.1-2016- Approval requirements for Domestic Gas Cooking Appliances
  AS / NZS 6.335-1 - General requirements for Domestic Electrical Appliances
  AS / NZS 6.335-2.6 - Particular Requirements for Domestic Electrical Cooking Appliances
  AS / NZS 1044 - Electromagnetic Compatible Requirements.

Injector table

Upright	Burner	Gas type	Injector Size (mm)	TPP (kPa)	NGC (Mj/h)
All models	Auxiliary	Natural gas	0.90	1.0	3.6
	Semi-Rapid		1.25		7.2
	Rapid		1.55		10.5
	Wok		2.00		18.0

Upright	Burner	Gas type	Injector Size (mm)	TPP (kPa)	NGC (Mj/h)
All models	Auxiliary	Universal LPG	0.50	2.75	3.2
	Semi-Rapid		0.72		7.2
	Rapid		0.87		10.5
	Wok		1,10		17.0

3 Installation

This appliance must be installed by an authorised person in accordance with this instruction manual, *AS/NZS 5601 – Gas installations* (installation and pipe sizing), local gas fitting regulations, local electrical regulations, local water regulations, local health regulations, Building Code of Australia and any other government authority.

Preparation of location and electrical and gas installation for the product is under customer's responsibility.

DANGER:
The product must be installed in accordance with all local gas and/or electrical regulations.

DANGER:
Prior to installation, visually check if the product has any defects on it. If so, do not have it installed.
Damaged products cause risks for your safety.

Before installation

Please note the product is packed without the feet fitted, therefore please ensure the feet are fitted as per the instructions; see *Installation and connection , page 20* before the appliance is placed in its final position.
To ensure that critical air gaps are maintained under the appliance, we recommend that this appliance is mounted on a solid base and that the feet do not sink into any carpet or soft flooring.
The kitchen floor must be able to carry the weight of the appliance plus the additional weight of cookware and bakeware and food.
Installation clearances and protection of combustible surfaces shall comply with the (AS 5601) gas installations code. Installation shall comply with the dimension in figure bearing in mind that.

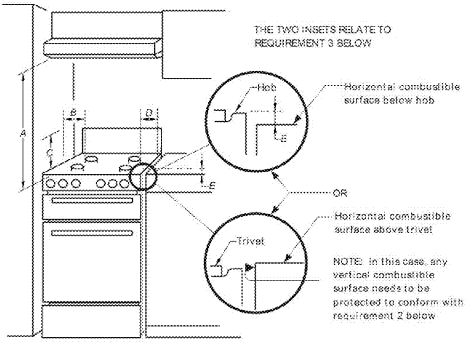

Overhead clearances—(Measurement A)
*Range hood*s and exhaust fans shall be installed in accordance with the manufacturer's relevant instructions. However, in no case shall the clearance between the highest part of the *hob* of the *gas* cooking *appliance* and a *range hood* be less than 600 mm or, for an overhead exhaust fan, 750 mm.

Side clearances—(Measurements B, & C)
Where B, measured from the periphery of the nearest *burner* to any vertical *combustible surface*, or vertical *combustible surface* covered with toughened glass or sheet metal, is less than 200 mm, the surface shall be protected to a height C of not less than 150 mm above the *hob* for the full dimension (width or depth) of the cooking surface area. Where the *gas* cooking *appliance* is fitted with a 'splashback', protection of the rear wall is not required.

Additional requirements for freestanding and elevated gas cooking appliances— (Measurements D & E). Where D, the distance from the periphery of the nearest burner to a horizontal combustible surface is less than 200 mm, then E shall be 10 mm or more, or the horizontal surface shall be above the trivet.

- **Gas inlet:** Rear left hand side 150 mm from the top and 50 mm from the left towards the centre.

Electric inlet: Rear left hand side 560mm from the top and 110 mm from the left towards the centre.

- Movement of your appliance is most easily achieved by lifting the front as indicated in the drawing. Open the oven door sufficiently to allow a comfortable and safe grip on the underside of the oven roof avoid causing any damage to the grill element or any internal parts of the oven. Do not move by pulling on the door handle or knobs. Move the appliance a bit at a time until placed in the position required.

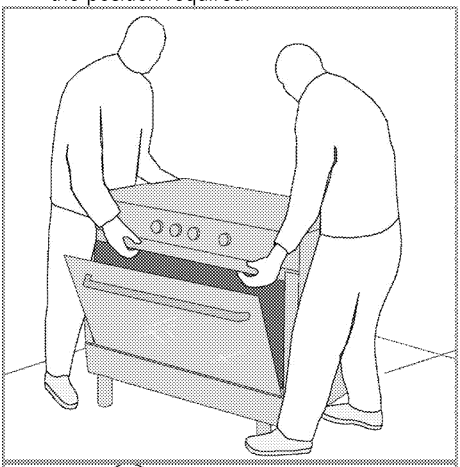

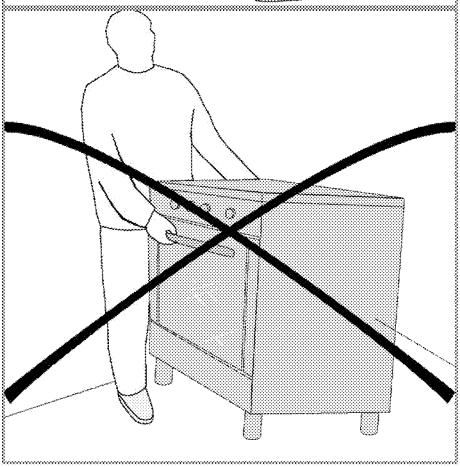

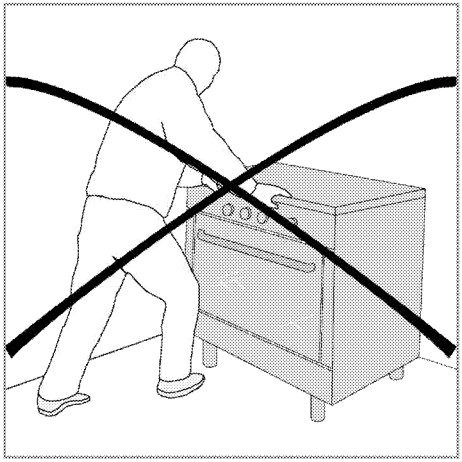

- The appliance corresponds to device class 1, i.e. it may be placed with the rear and **one** side to kitchen walls, kitchen furniture or equipment of any size. The kitchen furniture or equipment on the **other** side may only be of the same size or smaller.
- Any kitchen furniture next to the appliance must be heat-resistant (100 °C min.).

Decorative bottom covers

(This feature is optional. It may not exist on your product.)

You can use the supplied decorative bottom covers to prevent the appearance of the oven feet. It is supplied 3 cover (2 for the short side,1 for the front) and 6 plastic parts with product. For mounting the decorative bottom covers;

1. Insert two plastic parts to each lid to fit the slot in the bottom covers.

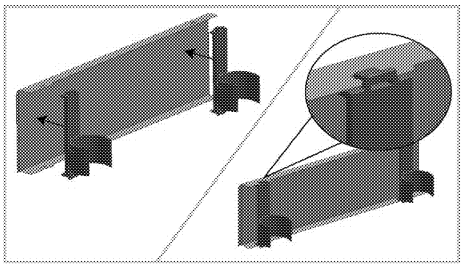

2. Insert the two shorter decorative covers on the side of product. Then insert the long decorative cover to front of product. Plastic parts of the side covers must be inversely with plastic parts on the front cover.

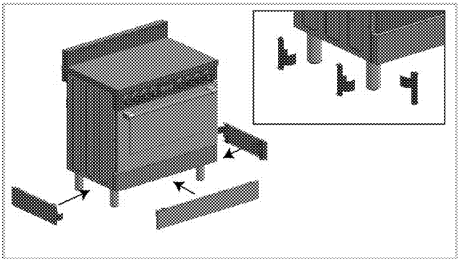

3. The appliance can be fitted in between cabinets and there is no clearance requirement to adjacent side cabinets. Push the product towards the kitchen wall like on image below. Before placing, it should be secured with safety chain.

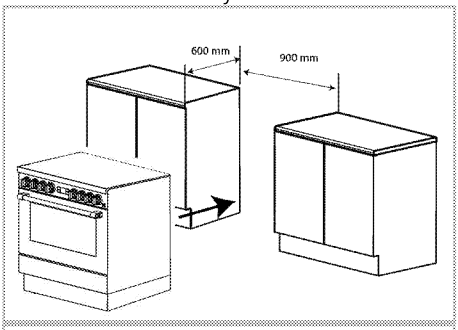

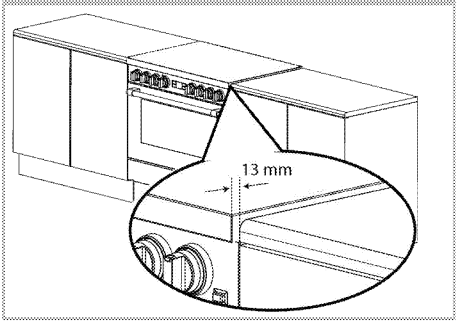

Product footless (furniture over) use

You can use the product without the legs by fixing furniture.

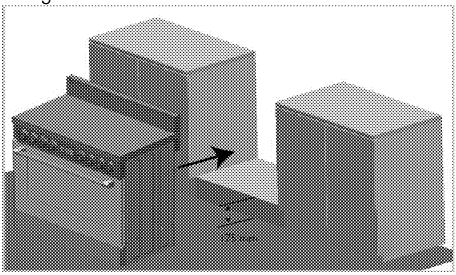

Before placing the product on furniture; Fix the fixing parts supplied with product with at least two screws according to the following sizes on furniture.

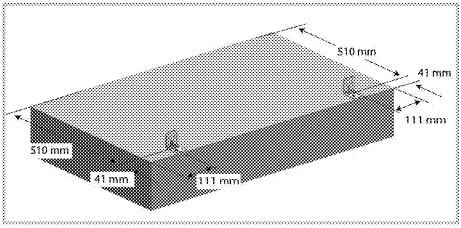

Place the product by pushing towards the kitchen wall.

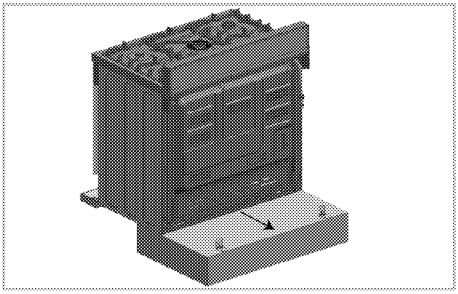

Open the bottom cover on the front of the product. The inside of the product, secure the product of fixing parts washers and screws.

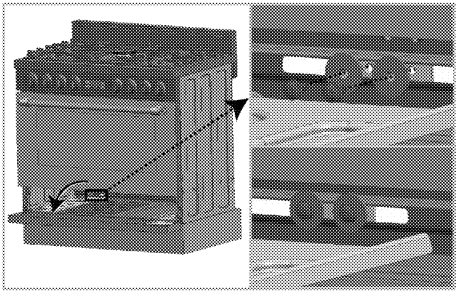

Safety chain (if supplied)

If your product has 2 safety chains;

The appliance must be secured against overbalancing by using the supplied two safety chains on your oven. Fasten hook (1)by using a proper peg to the kitchen wall (6) and connect safety chain (3) to the hook via the locking mechanism (2).

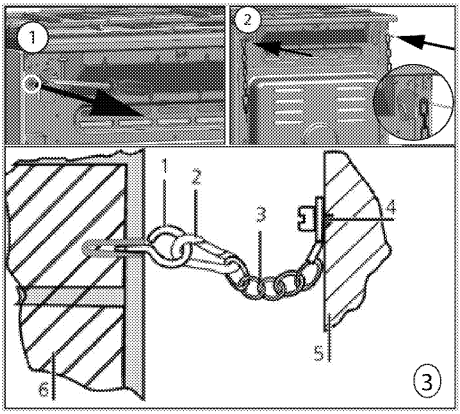

1 Stability hook
2 Locking mechanism
3 Safety chain (supplied and mounted to oven)
4 Firmliy fix chain to cooker rear
5 Rear of cooker
6 Kitchen wall

If your product has 1 safety chain;

The appliance must be secured against overbalancing by using the supplied one safety chain on your oven.

Follow below steps in the picture to secure the safety chain to your product.

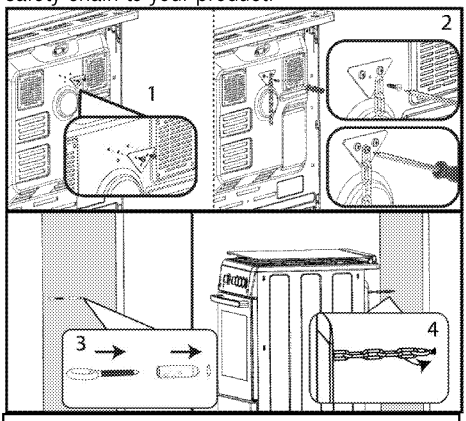

Stability chain to be as short as practicable to avoid oven tilting forward and diagonal to avoid oven side tilting.

Cooker stability chain for cookers is not designed with bracket engagement slot.

Stability chain to be as short as practicable to avoid oven tilting forward and diagonal to avoid oven side tilting.

Cooker stability chain for cookers not designed with bracket engagement slot.

Anti-tip stability device(If supplied with your product)

The appliance must be secured against overbalancing by using the supplied anti-tip stability devices on your oven.

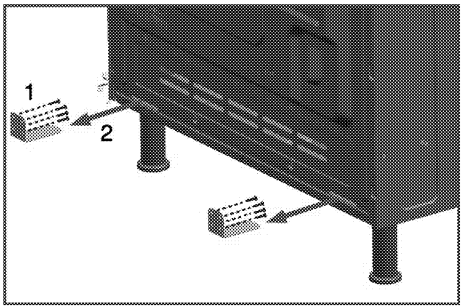

1. Locate the anti-tip devices on the wall with screws (according to the installation sheet)
2. Slide the oven to the wall. Be sure the anti-tip devices placed to the holes at the back side of the oven.

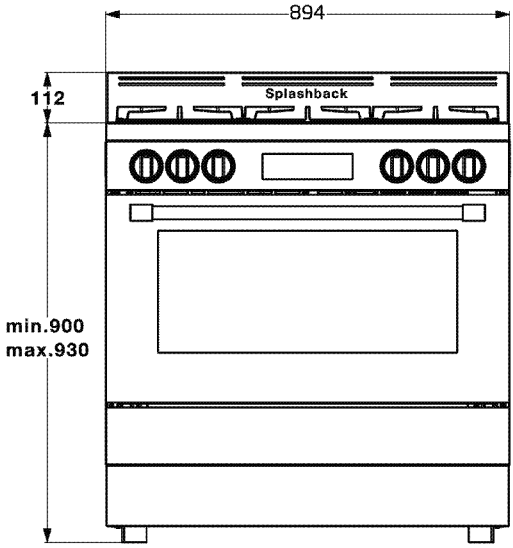

When decorative bottom covers are not used
Product height Min.875 Max.930

When decorative bottom covers are used
Product height Min.900 Max.930

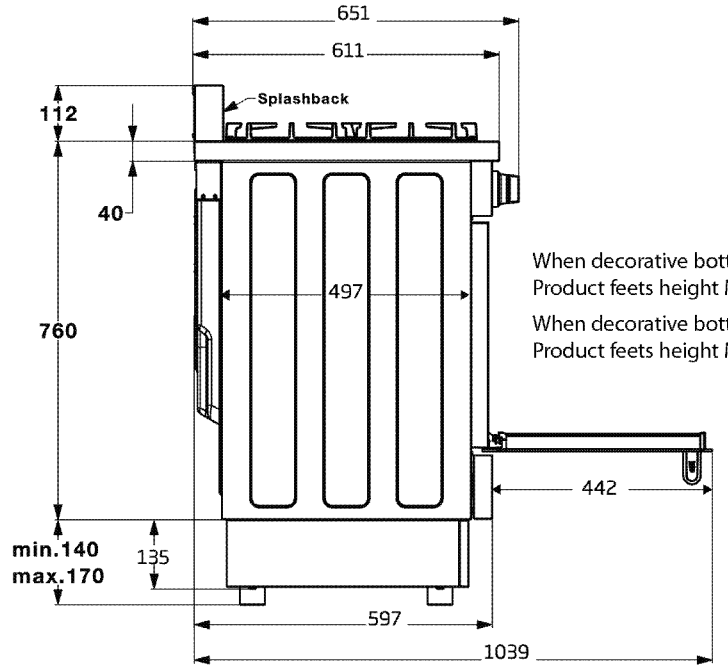

When decorative bottom covers are not used
Product feets height Min.115 Max.170

When decorative bottom covers are used
Product feets height Min.140 Max.170

(values in mm)

Room ventilation

All rooms require a window that can be opened, or equivalent, and some rooms will require a permanent vent as well.

The air for combustion is taken from the room air and the exhaust gases are emitted directly into the room.

Good room ventilation is essential for safe operation of your appliance. If there is no window or door available for room ventilation, an extra ventilation must be installed.

The appliance may be located in a kitchen, kitchen/diner or a bed-sitting room, but not in a room containing a bath or shower. The appliance must not be installed in a bed-sitting room of less than 20m^3.

Do not install this appliance in a room below ground level unless it is open to ground level on at least one side.

Room size	Ventilation opening
smaller than 5 m^3	min. 100 cm^2
5 m^3 to 10 m^3	min. 50 cm^2
greater than 10 m^3	not required
In the cellar or basement	min. 65 cm^2

Installation and connection

Product can only be installed and connected in accordance with the statutory installation rules.

Do not install the product next to refrigerators or freezers. The heat emitted by the product will increase the energy consumption of cooling appliances.

- Carry the product with at least two persons.
- Product must be placed directly on the floor. It must not be placed onto a base or a pedestal.

Do not use the door and/or handle to carry or move the product. The door, handle or hinges get damaged.

Electrical connection

C Connect the product to a grounded outlet/line protected by a fuse of suitable capacity as stated in the "Technical specifications" table. Have the grounding installation made by a qualified electrician while using the product with or without a transformer. The manufacturer shall not be liable for any damages that will arise due to using the product without a grounding installation in accordance with the local regulations.

DANGER:
The product must be connected to the mains supply only by an authorised and qualified person. The product's warranty period starts only after correct installation. Manufacturer shall not be held responsible for damages arising from procedures carried out by unauthorised persons.

DANGER:
The power cable must not be clamped, bent or trapped or come into contact with hot parts of the product.
A damaged power cable must be replaced by a qualified electrician. Otherwise, there is risk of electric shock, short circuit or fire!

The mains supply data must correspond to the data specified on the type label of the product. The rating plate is either seen when the door or the lower cover is opened or it is located at the rear wall of the unit depending on the unit type. Power cable of your product must comply with the values in "Technical specifications" table.

DANGER:
Before starting any work on the electrical installation, disconnect the product from the mains supply.
There is the risk of electric shock!

Connecting the power cable

1. **If a power cable is not supplied together with your product,** a power cable that you would select from the table (*Technical specifications, page 13*) in accordance with the electrical installation at your home must be connected to your product by following the instructions in cable diagram.

If it is not possible to disconnect all poles in the supply power, a disconnection unit with at least 3 mm contact clearance (fuses, line safety switches, contactors) must be connected and all

the poles of this disconnection unit must be adjacent to (not above) the product in accordance with IEE directives. Failure to obey this instruction may cause operational problems and invalidate the product warranty.

Additional protection by a residual current circuit breaker is recommended.

2. Open the terminal block cover with a screwdriver.
3. Insert the power cable through the cable clamp below the terminal and secure it to the main body with the integrated screw on cable clamping component.
4. Connect the cables according to the supplied diagram.

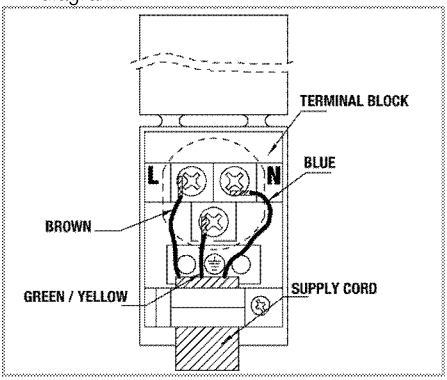

5. After completing the wire connections, close the terminal block cover.
6. Route the power cable so that it will not contact the product and get squeezed between the product and the wall.

Power cable must not be longer than 2m because of safety reasons.

- If this cooking range is to be connected to a new or upgraded electrical installation, then it must be connected to the supply by a supply cord fitted with:
  - An appropriate rated plug that is compatible with the socket-outlet fitted to the final sub-circuit in the fixed wiring that supplies this cooker / cooking range.
  - An appropriately rated installation male connector that is compatible with the installation female connector fitted to the final sub-circuit in the fixed wiring that supplies the cooker /cooking range.

Gas connection

DANGER:
Product can be connected to gas supply system only by an authorised and qualified person or technician with licence.
Risk of explosion or toxication due to unprofessional repairs!
Manufacturer shall not be held responsible for damages arising from procedures carried out by unauthorised or unlicensed persons.

DANGER:
Before starting any work on the gas installation, disconnect the gas supply.
There is the risk of explosion!

- Gas adjustment conditions and values are stated on labels (or ion type label).
- This appliance is suitable for connection with rigid pipe or flexible hose. The isolating manual shut-off valve connection point must be accessible when the appliance is installed.

  Suitable for Flexible Hose Connection
  The flexible hose assembly must be certified to AS/NZS 1869 class B or D, be of appropriate internal diameter for the total gas consumption, be kept as short as possible (not exceeding 1200mm), must not be in contact with the floor or any hot or sharp surfaces. The hose assembly must not be subject to strain, abrasion, kinking or deformation.

Where the data plate is obscured by cabinetry when the cooker is in the installed position, place the supplied duplicate data plate to a suitable adjacent surface or within the instruction manual for future reference.

If your product has only one gas outlet;

- Before connecting the gas hose, make sure that the gas hose outlet at the back of the product is on the same side of the product as the natural gas valve.

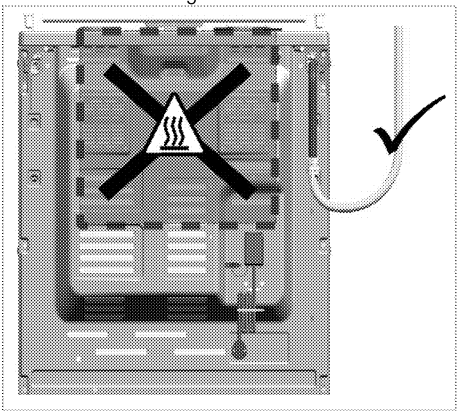

- If the gas hose outlet and the natural gas valve do not face on the same side, make sure that the hose does not pass through the hot area when connecting it.

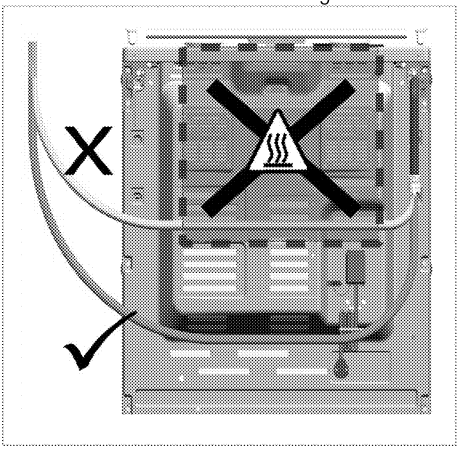

If your product has two gas outlets;

- One of the two outlets is sealed with a blind plug and the other one with a plastic plug. Locations of the blind plug and plastic plug may be different depending on the product.

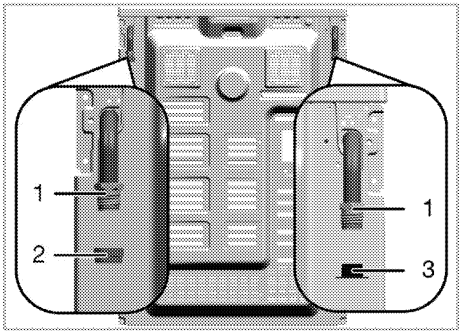

1 Gas hose outlet
2 Blind plug
3 Plastic plug

- Before gas connection, make sure that the natural gas valve and the gas hose outlet of the product to be connected to the gas is on the same side.
- If the natural gas valve and the gas hose outlet sealed with plastic plug face on the same side, make the gas connection as shown in the figure below.

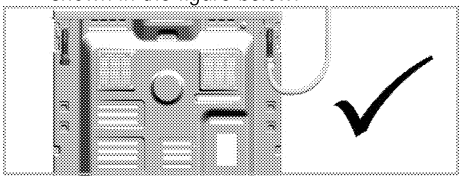

- If the natural gas valve and the gas hose sealed with blind plug face on the same side, remove and dispose the plastic plug. Take out the blind plug and close the gas hose outlet where gas connection will not be made with a new (unused) sealing gasket.

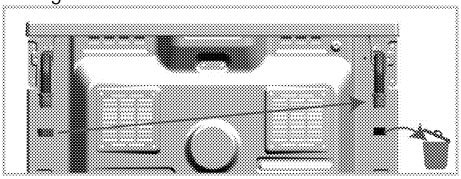

- Make the gas connection as shown in the figure below on the gas hose outlet near the natural gas valve.

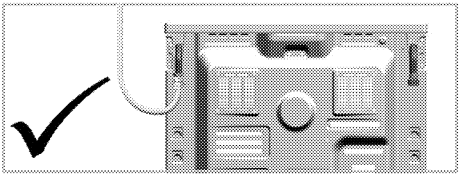

Risk of fire:

If you do not make the connection according to the instructions below, there will be the risk of gas leakage and fire. **Our company cannot be held responsible for damages resulting from this.**

- Gas connection must be made by the authorised service provider only.
- Gas connection of the product must definitely be made through the gas hose outlet near the natural gas valve.
- Plastic plug must be disposed, and the gas hose outlet that will not be used must be sealed with the blind plug.
- When closing the gas hose outlet that will not be used, you must definitely use a new and unused sealing gasket.

DANGER:
The flexible gas hose must be connected in a way that it does not contact the moving parts around it and is not trapped when the moving parts are travelling.
(e.g. drawers). Besides, it should not be placed in spaces where it might get squeezed.

DANGER:
The gas hose must not be clamped, bent or trapped or come into contact with hot parts of the product.
There is the risk of explosion due to damaged gas hose.

Leakage check at the connection point

- Make sure that all knobs on the product are turned off. Make sure that the gas supply is open. Prepare soapy foam and apply it onto the con-nection point of the hose for gas leakage control.
- Soapy part will froth if there is a gas leakage. In this case, inspect the gas connection once again.
- **If your product has two gas hose outlets,** make sure that the unused gas outlet is sealed with a blind plug. Prepare soapy foam and apply it onto the connection point of the blind plug to check for gas leaks. Soapy part will froth if there is a gas leakage. In this case, inspect the blind plug connection again.
- Instead of soap, you can use commercially available sprays for gas leak check.

Never use a match or lighter to make the gas leakage control.

Gas connection for Natural Gas- 1.0 kPa

Your product is equipped for natural gas (NG).

Appliance should be connected using an isolation valve, union and regulator.

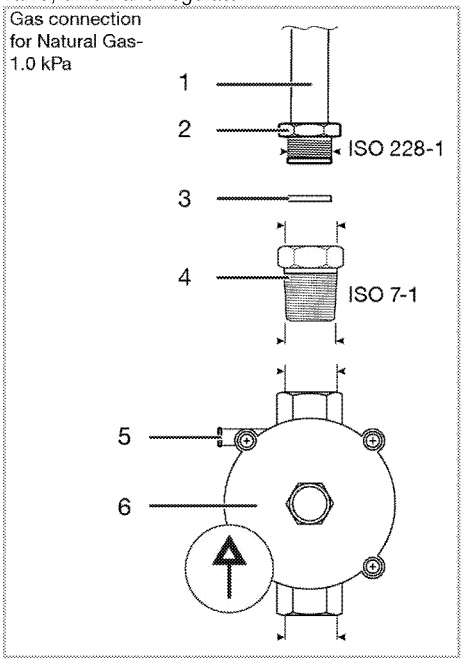

1 Gas inlet pipe
2 Nipple
3 Gasket
4 Conical adapter
5 Test point
6 Gas regulator

Do not use Naked Flame to test for leaks.

To ensure correct operation of the appliance it is necessary to set the correct pressure for the appliance **1.0kPa for Natural Gas**.
Check the pressure by connecting the pressure gauge or manometer to test point as shown on adjacent figures.
Natural Gas: the supplied regulator must be fitted to the appliance inlet connection. Gas pressure must be adjusted to 1.0 kPa when approximately 50% of the burners are on high flame, the appliance test point is located on the regulator.

Gas connection for LPG- Propane Gas- 2.75 kPa

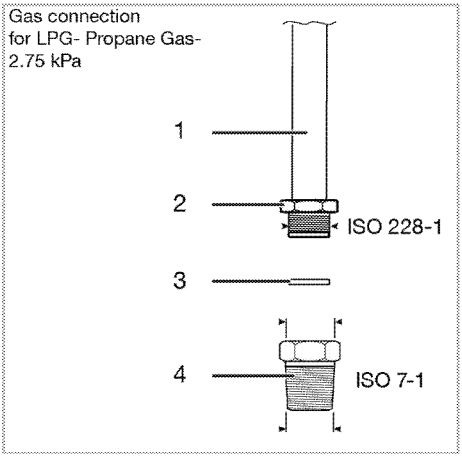

1 Gas inlet pipe
2 Nipple
3 Gasket
4 Conical adapter

Connecting with hose assembly

Where a hose assembly is to be used for the gas connection to this appliance it must :

- Comply to AS1869 Class B 10 mm diameter, be AGA gas.
- Be a short as possible, but in no case belonger than 1.2 m.
- This appliance is suitable for installation with a hose assembly.
- The hose must not be able to tuch any hot surface of be kinked when appliance is installed.
- At the completion of the installation, test for leaks.

2.75 kPa for LPG (Propane).

LPG: Gas pressure must be checked to confirm the appliance operating pressure is 2.75 kPa, the appliance test point is the Rapid burner injector as shown below.

1. Disconnect power.

2. Light the auxiliary burner and set to high flame. Ensure all other burners are off.

3. Zero manometer, then apply flexible tubing to seal over the Rapid burner injector and check the gas pressure by pressing in the corresponding burner control knob and turning to high flame position.

4. If the pressure is 2.75 kPa, reassemble the burner and perform the final checks as per page xx.

5. If the pressure is **not** 2.75 kPa, disconnect the appliance and check/adjust/replace the LPG cylinder regulator(s) as appropriate in accordance with AS/NZS 5601.

Patent 2015101170. For enquires contact Gas Approval Consulting Pty Ltd
BEKO licence 101 for AGA 8438 G only

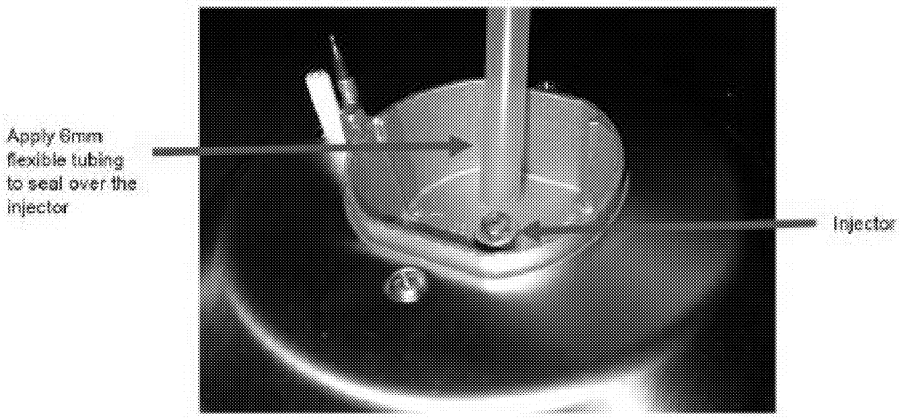

Patent 2015101170. For enquires contact Gas Approval Consulting Pty Ltd

Check for correct operation of burners, ignition system etc and demonstrate operation of appliance to customer.
If burner low setting requires adjustment refer to conversion procedure for adjustment.

DANGER:
Do not use open flame or do not smoke.
Do not operate any electrical buttons (e.g. lamp button, door bell and etc.)
Do not use fixed or mobile phones.
Risk of explosion and toxication!

DANGER:
The gas hose must not be clamped, bent or trapped or come into contact with hot parts of the product.
There is the risk of explosion due to damaged gas hose.

- **Gas leakage** and operation of the appliance must be tested by the installer before leaving. Check burner flames are blue in colour, stable and completely ignite at both high and low flame settings with no appreciable yellow tipping, carbon deposition, lifting, floating, lighting back or objectionable odour. Test burners individually and in combination, When satisfied with the operation of the cooker, please instruct the user on the correct method of operation.
- Push the product towards the kitchen wall.
- **Adjusting the feet of oven**
  4 feet are supplied together with your oven. Each foot must be installed into respective slots located at 4 corners under the oven. Screw the thread of the foot by turning in clockwise.
  For your safety, make sure that they are level when screwing all 4 feet. Unbalance of the legs has negative influence on cooking.

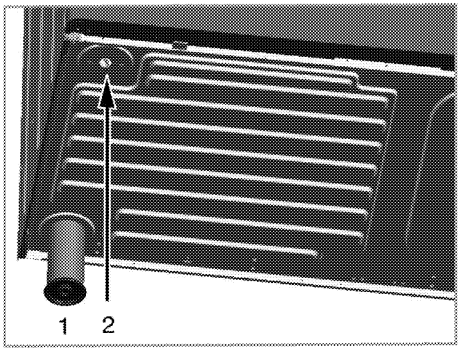

1 Foot
2 Foot slot

Final check

1. Reconnect the product to the mains.
2. Check electrical functions.
3. Open gas supply.
4. Check gas installations for secure fitting and tightness.
5. Ignite burners and check appearance of the flame.

Flame must be blue and have a regular shape. If the flame is yellowish, check if the burner cap is seated securely or clean the burner.

For products with cooling fan

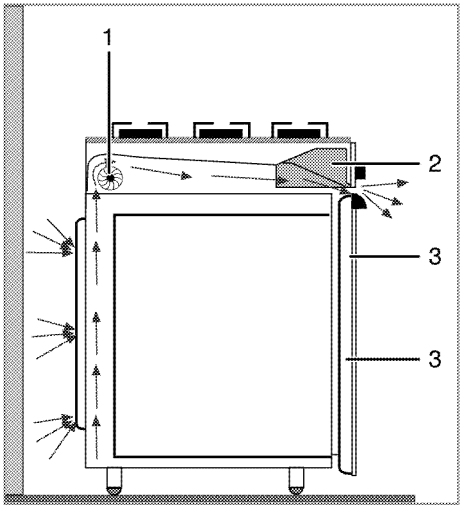

1 Cooling fan

2 Control panel
3 Door

The built-in cooling fan cools both the built-in cabinet and the front of the product.

Cooling fan continues to operate for about 20-30 minutes after the oven is switched off.

Gas conversion

DANGER:
Before starting any work on the gas installation, disconnect the gas supply. There is the risk of explosion!

In order to change your appliance's gas type, change all injectors and make flame adjustment for all valves at reduced flow rate position.

Exchange of injector for the burners

1. Take off burner cap and burner body.
2. Unscrew injectors by turning the counter-clockwise.
3. Fit new injectors.
4. Check all connections for secure fitting and tightness.

New injectors have their position marked on their packing or injector table on *Injector table, page 14* can be referred to.

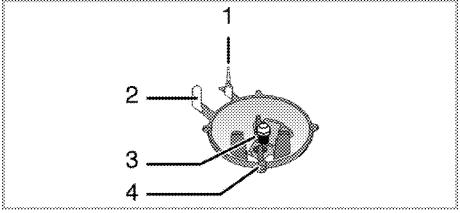

1 Flame failure device (model dependant)
2 Spark plug
3 Injector
4 Burner

Unless there is an abnormal condition, do not attempt to remove the gas burner taps. You must call an Authorised service agent if it is necessary to change the taps.

Exchange of injector for the wok burners

1. Take off burner cap and burner body.
2. Unscrew the screws on injector cover and remove the injector cover.

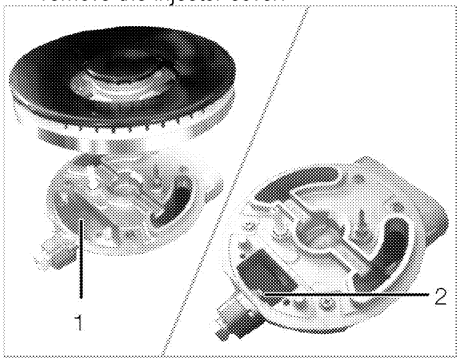

1 Injector cover
2 Injector

3. Unscrew injectors by turning the counter-clockwise.
4. Fit new injectors.
5. Check all connections for secure fitting and tightness.

New injectors have their position marked on their packing or injector table on *Injector table, page 14* can be referred to.

Unless there is an abnormal condition, do not attempt to remove the gas burner taps. You must call an Authorised service agent if it is necessary to change the taps.

Reduced gas flow rate setting for hob taps

1. Ignite the burner that is to be adjusted and turn the knob to the reduced position.
2. Remove the knob from the gas tap.
3. Use an appropriately sized screwdriver to adjust the flow rate adjustment screw.

For LPG (Butane - Propane) turn the screw clockwise. For the natural gas, you should turn the screw **counter-clockwise**once.

» The normal length of a straight flame in the reduced position should be 6-7 mm.

4. If the flame is higher than the desired position, turn the screw clockwise. If it is smaller turn anticlockwise.

5. For the last control, bring the burner both to high-flame and reduced positions and check whether the flame is on or off.

Depending on the type of gas tap used in your appliance the adjustment screw position may vary.

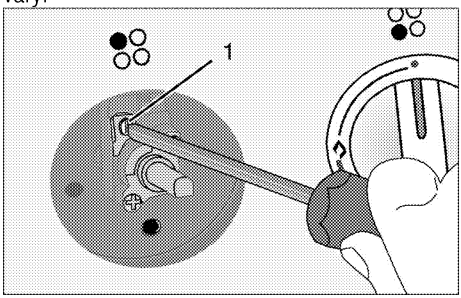

1 Flow rate adjustment screw

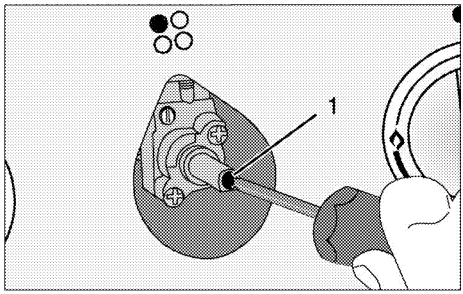

1 Flow rate adjustment screw

If the gas type of the unit is changed, then the rating plate that shows the gas type of the unit must also be changed.

4 Preparation

Tips for saving energy

The following information will help you to use your appliance in an ecological way, and to save energy:

- Use dark coloured or enamel coated cookware in the oven since the heat transmission will be better.
- While cooking your dishes, perform a preheating operation if it is advised in the user manual or cooking instructions.
- Do not open the door of the oven frequently during cooking.
- Try to cook more than one dish in the oven at the same time whenever possible. You can cook by placing two cooking vessels onto the wire shelf.
- Cook more than one dish one after another. The oven will already be hot.
- You can save energy by switching off your oven a few minutes before the end of the cooking time. Do not open the oven door.
- Defrost frozen dishes before cooking them.
- Use pots/pans with cover for cooking. If there is no cover, energy consumption may increase 4 times.
- Select the burner which is suitable for the bottom size of the pot to be used. Always select the correct pot size for your dishes. Larger pots require more energy.Initial use

Time setting

While making any adjustment, related symbols will flash on the display.

Press +/− keys to set the time of the day after the oven is energized for the first time.

For touch control models, touch "Setting" first and then use + / − to set the time of the day.

Confirm the setting by touching "Program" symbol and wait for 4 seconds without touching any keys to confirm.

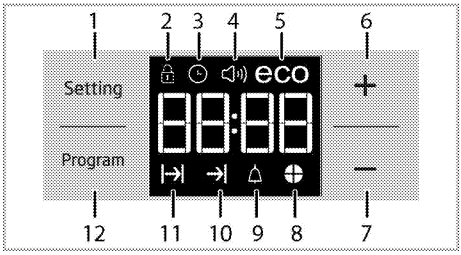

1 Setting key
2 Keylock symbol
3 Clock symbol
4 Alarm volume symbol
5 Eco mode symbol
6 Plus key
7 Minus key
8 Time slice symbol
9 Alarm symbol
10 End of Cooking Time symbol
11 Cooking Time symbol
12 Program key

If the initial time is not set, clock will run starting from **12:00** and symbol will be displayed. The symbol will disappear once the time is set.

Current time settings are canceled in case of power failure. It needs to be readjusted.

First cleaning of the appliance

The surface might get damaged by some detergents or cleaning materials.
Do not use aggressive detergents, cleaning powders/creams or any sharp objects during cleaning.
Do not use harsh abrasive cleaners or sharp metal scrapers to clean the oven door glass since they can scratch the surface, which may result in shattering of the glass.

1. Remove all packaging materials.
2. Wipe the surfaces of the appliance with a damp cloth or sponge and dry with a cloth.

Initial heating

Heat up the product for about 30 minutes and then switch it off. Thus, any production residues or layers will be burnt off and removed.

WARNING
Hot surfaces cause burns!
Product may be hot when it is in use. Never touch the hot burners, inner sections of the oven, heaters and etc. Keep children away. Always use heat resistant oven gloves when putting in or removing dishes into/from the hot oven.

Electric oven

1. Take all baking trays and the wire grill out of the oven.
2. Close the oven door.
3. Select Static position.
4. Select the highest oven power; See *How to operate the electric oven, page 33*.
5. Operate the oven for about 30 minutes.
6. Turn off your oven; See *How to operate the electric oven, page 33*

Grill oven

1. Take all baking trays and the wire grill out of the oven.
2. Close the oven door.
3. Select the highest grill power; see *How to operate the grill, page 34*.
4. Operate the grill about 30 minutes.
5. Turn off your grill; see *How to operate the grill, page 34*

Smoke and smell may emit for a couple of hours during the initial operation. This is quite normal. Ensure that the room is well ventilated to remove the smoke and smell. Avoid directly inhaling the smoke and the smell that emits.

5 How to use the hob

General information about cooking

Never fill the pan with oil more than one third of it. Do not leave the hob unattended when heating oil. Overheated oils bring risk of fire. **Never attempt to extinguish a possible fire with water!** When oil catches fire, cover it with a fire blanket or damp cloth. Turn off the hob if it is safe to do so and call the fire department.

- Before frying foods, always dry them well and gently place into the hot oil. Ensure complete thawing of frozen foods before frying.
- Do not cover the vessel you use when heating oil.
- Place the pans and saucepans in a manner so that their handles are not over the hob to prevent heating of the handles. Do not place unbalanced and easily tilting vessels on the hob.
- Do not place empty vessels and saucepans on cooking zones that are switched on. They might get damaged.
- Operating a cooking zone without a vessel or saucepan on it will cause damage to the product. Turn off the cooking zones after the cooking is complete.
- As the surface of the product can be hot, do not put plastic and aluminum vessels on it. Such vessels should not be used to keep foods either.
- Use flat bottomed saucepans or vessels only.
- Put appropriate amount of food in saucepans and pans. Thus, you will not have to make any unnecessary cleaning by preventing the dishes from overflowing. Do not put covers of saucepans or pans on cooking zones.
  Place the saucepans in a manner so that they are centered on the cooking zone. When you want to move the saucepan onto another cooking zone, lift and place it onto the cooking zone you want instead of sliding it.

Gas cooking

- Size of the vessel and the flame must match each other. Adjust the gas flames so that they will not extend the bottom of the vessel and center the vessel on saucepan carrier.

Using the hobs

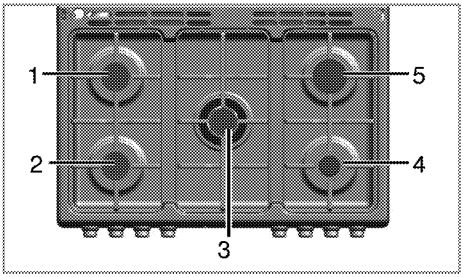

1 Normal burner 20–22 cm
2 Normal burner 20–22 cm
3 Wok burner 22-24 cm
4 Auxiliary burner 12–14 cm
5 Rapid burner 22–24 cm is list of advised diameter of pots to be used on related burners.

Large flame symbol indicates the highest cooking power and small flame symbol indicates the lowest cooking power. In turned off position (top), gas is not supplied to the burners.

Igniting the gas burners

1. Keep burner knob pressed.
2. Turn it counter clockwise to large flame symbol.

» Gas is ignited with the spark created.

3. Adjust it to the desired cooking power.

Turning off the gas burners

Turn the knob to off (upper) position.

Gas shut off safety system (in models with thermic component)

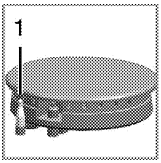

1. Gas shut off safety

As a counter measure against blow out due to fluid overflows at burners, safety mechanism trips and shuts off the gas.

- Push the knob inwards and turn it counter clockwise to ignite.
- After the gas ignites, keep the knob pressed for 3-5 seconds more to engage the safety system.
- If the gas does not ignite after you press and release the knob, repeat the same procedure by keeping the knob pressed for 15 seconds.

DANGER:
Release the button if the burner is not ignited within 15 seconds.
Wait at least 1 minute before trying again. There is the risk of gas accumulation and explosion!

DO NOT USE OR STORE FLAMMABLE MATERIALS IN THE APPLIANCE STORAGE DRAWER OR NEAR THIS APPLIANCE
DO NOT SPRAY AEROSOLS IN THE VICINITY OF THIS APPLIANCE WHILE IT IS IN OPERATION.

WHERE THIS APPLIANCE IS INSTALLED IN MARINE CRAFT OR IN CARAVANS, IT SHALL NOT BE USED AS A SPACE HEATER

DO NOT MODIFY THIS APPLIANCE

DO NOT PLACE ARTICLES ON OR AGAINST THIS APPLIANCE

Wok burner

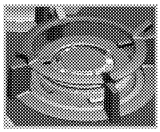

Wok burners help you to cook faster. Wok, which is particularly used in Asian kitchen is a kind of deep and flat fry-pan made of sheet metal, which is used to cook minced vegetable and meat at strong flame in a short time.
Since meals are cooked at strong flame and in a very short time in such fry-pans that conduct the heat rapidly and evenly, the nutrition value of the food is preserved and vegetables remain crispy. You can use wok burner for regular saucepans as well.
If you want to use regular saucepan on wok burner, you must take out the wok fry-pan carrier from the hob.

6 How to operate the oven

General information on baking, roasting and grilling

WARNING
Hot surfaces cause burns!
Product may be hot when it is in use. Never touch the hot burners, inner sections of the oven, heaters and etc. Keep children away. Always use heat resistant oven gloves when putting in or removing dishes into/from the hot oven.

DANGER:
Be careful when opening the oven door as steam may escape.
Exiting steam can scald your hands, face and/or eyes.

Tips for baking

- Use non-sticky coated appropriate metal plates or aluminum vessels or heat-resistant silicone moulds.
- Make best use of the space on the rack.
- Place the baking mould in the middle of the shelf.
- Select the correct rack position before turning the oven or grill on. Do not change the rack position when the oven is hot.
- Keep the oven door closed.

Tips for roasting

- Treating whole chicken, turkey and large piece of meat with dressings such as lemon juice and black pepper before cooking will increase the cooking performance.
- It takes about 15 to 30 minutes longer to roast meat with bones when compared to roasting the same size of meat without bones.
- Each centimeter of meat thickness requires approximately 4 to 5 minutes of cooking time.
- Let meat rest in the oven for about 10 minutes after the cooking time is over. The juice is better distributed all over the roast and does not run out when the meat is cut.
- Fish should be placed on the middle or lower rack in a heat-resistant plate.

Tips for grilling

When meat, fish and poultry are grilled, they quickly get brown, have a nice crust and do not get dry. Flat pieces, meat skewers and sausages are particularly suited for grilling as are vegetables with high water content such as tomatoes and onions.

- Distribute the pieces to be grilled on the wire shelf or in the baking tray with wire shelf in such a way that the space covered does not exceed the size of the heater.
- Slide the wire shelf or baking tray with grill into the desired level in the oven. If you are grilling on the wire shelf, slide the baking tray to the lower rack to collect fats. Add some water in the tray for easy cleaning.

Foods that are not suitable for grilling carry the risk of fire. Only grill food which is suitable for intensive grilling heat.
Do not place the food too far in the back of the grill. This is the hottest area and fatty food may catch fire.

How to operate the electric oven

Select temperature and operating mode

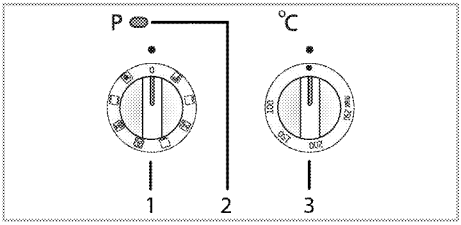

1 Oven knob
2 Thermostat lamp
3 Thermostat knob

1. Set the Temperature knob to the desired temperature.
2. Set the Function knob to the desired operating mode.

» Oven heats up to the adjusted temperature and maintains it. During heating, temperature lamp stays on.

Switching off the electric oven

Turn the function knob and temperature knob to off (upper) position.

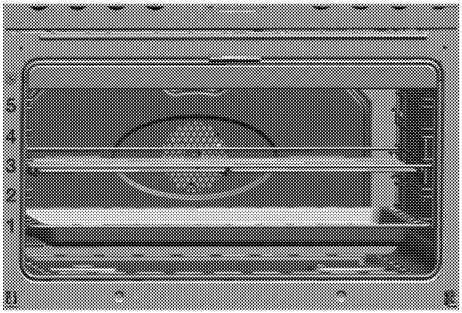

Rack positions (For models with wire shelf)

It is important to place the wire shelf onto the side rack correctly. Wire shelf must be inserted between the side racks as illustrated in the figure. Do not let the wire shelf stand against the rear wall of the oven. Slide your wire shelf to the front section of the rack and settle it with the help of the door in order to obtain a good grill performance.

Operating modes

The order of operating modes shown here may be different from the arrangement on your product.

Top and bottom heating

Top and bottom heating are in operation. Food is heated simultaneously from the top and bottom. For example, it is suitable for cakes, pastries, or cakes and casseroles in baking moulds. Cook with one tray only.

Bottom heating

Only bottom heating is in operation. It is suitable for pizza and for subsequent browning of food from the bottom.
This function must be used for easy steam cleaning as well.

Fan supported bottom/top heating

Top heating, bottom heating plus fan (in the rear wall) are in operation. Hot air is evenly distributed throughout the oven rapidly by means of the fan. Cook with one tray only.

Operating with fan

The oven is not heated. Only the fan (in the rear wall) is in operation. Suitable for thawing frozen granular food slowly at room temperature and cooling down the cooked food.

Fan Heating

Warm air heated by the fans is evenly distributed throughout the oven rapidly by means of the fan. It is suitable for cooking your meals in different rack levels and preheating is not required in most cases. Suitable for cooking with multi trays.
This function must be used for easy steam cleaning as well.

Booster

Top heating, bottom heating and fan assisted heating (in the rear wall) are in operation. Food is cooked evenly and quickly all around. Cook with one tray only.

Full grill

Large grill at the ceiling of the oven is in operation. It is suitable for grilling large amount of meat.

- Put big or medium-sized portions in correct rack position under the grill heater for grilling.
- Set the temperature to maximum level.
- Turn the food after half of the grilling time.

Grill+Fan

Grilling effect is not as strong as in Full Grill

- Put small or medium-sized portions in correct shelf position under the grill heater for grilling.
- Set the desired temperature.
- Turn the food after half of the grilling time.

Using the oven clock

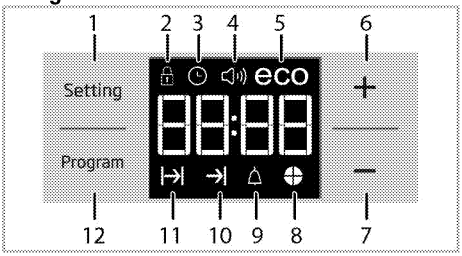

1 Setting key
2 Keylock symbol
3 Clock symbol
4 Alarm volume symbol
5 Eco mode symbol
6 Plus key
7 Minus key
8 Time slice symbol
9 Alarm symbol
10 End of Cooking Time symbol
11 Cooking Time symbol
12 Program key

Maximum time that can be set for end of cooking is 5 hours 59 minutes. Program will be cancelled in case of power failure. You must reprogram the oven.

While making any setting, related symbols will flash on the display. You must wait for a short time for the settings to take effect.

If no cooking setting is made, time of the day cannot be set.

Remaining time will be displayed if cooking time is set when the cooking starts.

Cooking by setting the cooking time;

You can set the oven so that it will stop at the end of the specified time by setting the cooking time on the timer.

1. Select the function for cooking.
2. Touch "Program" until |→| symbol appears on display for cooking time.
3. Set the cooking time with + / − keys.

» » After the cooking time is set, |→| symbol and the time slice will appear on display continuously.

4. Place the dish into the oven and set the temperature with temperature knob. Cooking will start.

» Cooking time starts to count down on display when cooking starts and all parts of time slice symbol is lit. The set cooking time is divided into 4 equal parts and when the time of each parts ends, the symbol of that parts turns off. So you can understand the ratio of remaining cooking time to total cooking time easily.

Setting the the end of cooking time to a later time;

After setting the cooking time on the timer, you can set the end of cooking time to a later time.

1. Select the function for cooking.
2. Touch "Program" until |→| symbol appears on display for cooking time.
3. Set the cooking time with + / − keys.

» » Once the Cooking Time is set, |→| symbol will appear on display continuously.

4. Touch "Program" until →| symbol appears on display for the end of cooking time.
5. Press + /− keys to set the end of cooking time.

» After the cooking time is set, |→| symbol plus →| symbol and the time slice will appear on

display continuously. Once the cooking starts, →| symbol disappears.

6. Place the dish into the oven and set the temperature with temperature knob. Cooking will start.

» **Oven timer calculates the startup time by deducting the cooking time from the end of cooking time you have set.** Selected operating mode is activated when the startup time of cooking has come and the oven is heated up to the set temperature. It maintains this temperature until the end of cooking time.

» Cooking time starts to count down on display when cooking starts and all parts of time slice symbol is lit. The set cooking time is divided into 4 equal parts and when the time of each parts ends, the symbol of that parts turns off. So you can understand the ratio of remaining cooking time to total cooking time easily.

7. After the cooking process is completed, **"End"** appears on the displayed and the timer gives an audio warning.
8. Audio warning sounds for 2 minutes. To stop the audio warning, just press any key. Audio warning will be silenced and current time will be displayed.

> If you press any key at the end of the audio warning, the oven will restart operating. Turn the temperature knob and function knob to **"0"** (off) position to switch off the oven in order to prevent re-operation of the oven at the end of warning.

Activating the keylock

You can prevent oven from being intervened with by activating the key lock function.

1. Touch "Setting" until 🔒 symbol appears on display.

» **"OFF"** will appear on the display.

2. Press ✚ to activate the key lock.

» Once the key lock is activated, **"On"** appears on the display and the 🔒 symbol remains lit.

> Oven keys are not functional when the key lock is activated. Key lock will not be cancelled in case of power failure.

To deactivate the keylock

1. Touch "Setting" until 🔒 symbol appears on display.

» **"On"** will appear on the display.

2. Disable the key lock by pressing the ━ key.

» **"OFF"** will be displayed once the keylock is deactivated.

Setting the alarm clock

You can use the timer of the product for any warning or reminder apart from the cooking program.

The alarm clock has no influence on the functions of the oven. It is only used as a warning. For example, this is useful when you want to turn food in the oven at a certain point of time. Timer will give an audio warning at the end of the set time.

1. Touch "Program" until 🔔 symbol appears on display.

> Maximum alarm time can be 23 hours and 59 minutes.

2. Set the alarm duration by using ✚ / ━ keys.

> Function keys for alarm tone, time of day, display brightness and temperature keys should be at 0 (OFF) position.

» 🔔 symbol will remain lit and the alarm time will appear on the display once the alarm time is set.

3. At the end of the alarm time, 🔔 symbol starts flashing and the audio warning is heard.

Turning off the alarm

1. Audio warning sounds for 2 minutes. To stop the audio warning, just press any key.

» Audio warning will be silenced and current time will be displayed.

Cancelling the alarm;

1. Touch "Program" until 🔔 symbol appears on display in order to cancel the alarm.
2. Press and hold ━ key until **"00:00"** is displayed.

> Alarm time will be displayed. If the alarm time and cooking time are set concurrently, shortest time will be displayed.

Changing alarm tone

1. Touch "Setting" until symbol appears on display.
2. Adjust the desired alarm tone with + / − keys.
3. The tone you have set will be activated in a short time.

» Selected alarm tone will appear as **"b-01"**, **"b-02"** or **"b-03"** on the display.

Changing the time of the day

To change the time of the day you have previously set:

1. Touch "Setting" until symbol appears on display.
2. Set the time of the day with + /− keys.
3. The time you have set will be activated in a short time.

Economy mode

You can save energy with economy mode while cooking by setting cooking time in the oven. This mode completes the cooking with the inner temperature of the oven by switching off the heaters before the end of cooking time.

Setting the economy mode

1. Touch "Setting" symbol until **eco** symbol appears on display.

» **"OFF"** will appear on the display.

2. Enable economy mode by touching + key.

» Once the economy mode is activated, **"On"** appears on the display and the eco symbol remains lit.

Disabling economy mode

1. Touch "Setting" symbol until **eco** symbol appears on display.

» **"On"** will appear on the display.

2. Disable economy mode by touching − key.

» **"Off"** will be displayed once the eco mode is deactivated.

Setting the screen brightness

1. Touch "Setting" until **d-01** or **d-02** or **d-03** appears on display for display brightness.
2. Set the desired brightness with + /− keys.

» The time you have set will be activated in a short

Cooking times table

The timings in this chart are meant as a guide. Timings may vary due to temperature of food, thickness, type and your own preference of cooking.

Baking and roasting

1st rack of the oven is the **bottom** rack.

Dish	Cooking level number	Operating Mode (see p.28-29)	Rack position	Temperature (°C)	Cooking time (approx. in min.)
Cakes in tray*	One level		3	175	25 ... 35
Cakes in mould*	One level		2	180	50 ... 60
Cakes in cooking paper*	One level		3	165	20 ... 30
	2 levels		2 - 4	175	35 ... 45
Sponge cake*	One level		3	200	8 ... 12
	2 levels		2 - 4	200	15 ... 20
Cookies*	One level		3	175	25 ... 30
	2 levels		2 - 4	165	35 ... 45
Dough pastry*	One level		2	200	30 ... 40
	2 levels		2 - 4	200	45 ... 55
Rich pastry*	One level		2	200	25 ... 35
	2 levels		2 - 4	200	35 ... 45
Leaven*	One level		2	200	35 ... 45
Lasagna*	One level		2 - 3	200	30 ... 40
Pizza*	One level		2	200 ... 220	15 ... 20
Beef steak (whole) / Roast	One level		3	25 min. 250/max then 130 ... 190	100 ... 120
Leg of Lamb (casserole)	One level		3	25 min. 250/max then 190	70 ... 90

Roasted chicken	One level		2	15 min. 250/max then 180 ... 190	60 ... 70
Turkey (5.5 kg)	One level		1	25 min. 250/max then 180 ... 190	150 ... 210
Fish	One level		3	200	20 ... 30
When cooking with 2 trays at the same time, place the deeper tray on the upper rack and the other one on the lower rack. * It is suggested to perform preheating for all foods.					

Tips for baking cake

- If the cake is too dry, increase the temperature by 10°C and decrease the cooking time.
- If the cake is wet, use less liquid or lower the temperature by 10°C.
- If the cake is too dark on top, place it on a lower rack, lower the temperature and increase the cooking time.
- If cooked well on the inside but sticky on the outside use less liquid, lower the temperature and increase the cooking time.

Tips for baking pastry

- If the pastry is too dry, increase the temperature by 10°C and decrease the cooking time. Dampen the layers of dough with a sauce composed of milk, oil, egg and yoghurt.
- If the pastry takes too long to bake, pay care that the thickness of the pastry you have prepared does not exceed the depth of the tray.
- If the upper side of the pastry gets browned, but the lower part is not cooked, make sure that the amount of sauce you have used for the pastry is not too much at the bottom of the pastry. Try to scatter the sauce equally between the dough layers and on the top of pastry for an even browning.

Cook the pastry in accordance with the mode and temperature given in the cooking table. If the bottom part is still not browned enough, place it on one lower rack next time.

Tips for cooking vegetables

- If the vegetable dish runs out of juice and gets too dry, cook it in a pan with a lid instead of a tray. Closed vessels will preserve the juice of the dish.
- If a vegetable dish does not get cooked, boil the vegetables beforehand or prepare them like canned food and put in the oven.

How to operate the grill

WARNING
Close oven door during grilling.
Hot surfaces may cause burns!

Switching on the grill

1. Turn the Function knob to the desired grill symbol.
2. Then, select the desired grilling temperature.
3. If required, perform a preheating of about 5 minutes.

» Temperature light turns on.

Switching off the grill

1. Turn the Function knob to Off (top) position.

Foods that are not suitable for grilling carry the risk of fire. Only grill food which is suitable for intensive grilling heat.
Do not place the food too far in the back of the grill. This is the hottest area and fatty food may catch fire.

Cooking times table for grilling

Grilling with electric grill

Food	Insertion level	Grilling time (approx.)
Fish	4...5	20...25 min. #
Sliced chicken	4...5	25...35 min.
Lamb chops	4...5	20...25 min.
Roast beef	4...5	25...30 min. #
Veal chops	4...5	25...30 min. #
Toast bread	4	2...3 min.
# depending on thickness		

7 Maintenance and care

General information

Service life of the product will extend and the possibility of problems will decrease if the product is cleaned at regular intervals.

DANGER:
Disconnect the product from mains supply before starting maintenance and cleaning works.
There is the risk of electric shock!

DANGER:
Allow the product to cool down before you clean it.
Hot surfaces may cause burns!

- Clean the product thoroughly after each use. In this way it will be possible to remove cooking residues more easily, thus avoiding these from burning the next time the appliance is used.
- No special cleaning agents are required for cleaning the product. Use warm water with washing liquid, a soft cloth or sponge to clean the product and wipe it with a dry cloth.
- Always ensure any excess liquid is thoroughly wiped off after cleaning and any spillage is immediately wiped dry.
- Do not use cleaning agents that contain acid or chloride to clean the stainless or inox surfaces and the handle. Use a soft cloth with a liquid detergent (not abrasive) to wipe those parts clean, paying attention to sweep in one direction.

The surface might get damaged by some detergents or cleaning materials.
Do not use aggressive detergents, cleaning powders/creams or any sharp objects during cleaning.
Do not use harsh abrasive cleaners or sharp metal scrapers to clean the oven door glass since they can scratch the surface, which may result in shattering of the glass.

Do not use steam cleaners to clean the appliance as this may cause an electric shock.

Cleaning the hob

Gas hobs

1. Remove and clean the saucepan carriers and burner caps.
2. Clean the hob.
3. Install the burner caps and make sure that they are seated correctly.
4. When installing the upper grills, pay attention to place the saucepan carriers so that the burners are centered.

Cleaning the control panel

Clean the control panel and knobs with a damp cloth and wipe them dry.

Do not remove the control buttons/knobs to clean the control panel.
Control panel may get damaged!

Cleaning the oven

No oven cleaner or any other special cleaning agent is required for cleaning the oven. It is recommended to wipe the oven with a damp cloth while it is still warm.

To clean the side wall

(This feature is optional. It may not exist on your product.)

1. Remove the front section of the side rack by pulling it in the opposite direction of the side wall.
2. Remove the side rack completely by pulling it towards you.

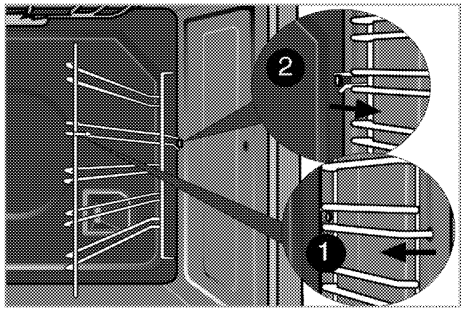

Catalytic walls

(This feature is optional. It may not exist on your product.)

The inner side walls (A) and/or the rear wall (B) of your product may be coated with catalytic enamel. Catalytic walls have a light matte colour and a porous surface. Catalytic walls of the oven should not be cleaned. Porous surfaces of the catalytic walls are automatically cleaned by absorbing and converting the spilled oil (steam and carbon dioxide).

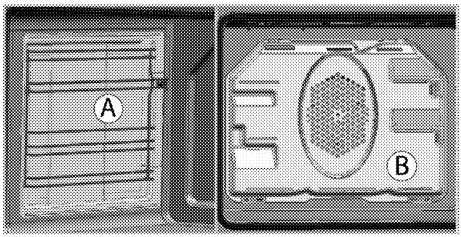

Easy Steam Cleaning

It ensures easy cleaning because the dirt (having waited not for too long) is softened with the steam that forms inside the oven and the water drops condensing on the inner surfaces of the oven.

1. Remove all accessories inside the oven.
2. Pour 750 ml of water into the oven tray and place the tray at the 2nd rack of the oven.

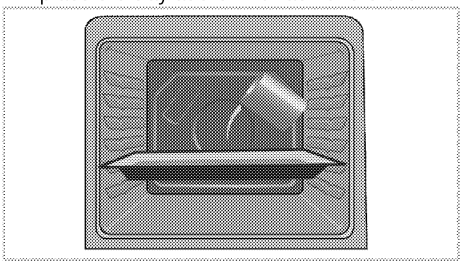

3. Set the oven to easy steam cleaning mode and run at 100°C for 25 minutes.
4. Open the door and wipe the inner surfaces of the oven with a damp sponge or cloth.
5. Use warm water with washing liquid, a soft cloth or sponge to clean the persistent dirt and wipe it with a dry cloth.

During the easy steam cleaning mode, water that is placed in the tray to soften lightly formed residues/dirt within the oven cavity will evaporate and condense in the oven cavity and inner glass of the oven door, therefore water may drip when the oven door is opened. Wipe away the condensation as soon as the oven door is opened.

Clean oven door

To clean the oven door, use warm water with washing liquid, a soft cloth or sponge to clean the product and wipe it with a dry cloth.

Don't use any harsh abrasive cleaners or sharp metal scrapers for cleaning the oven door. They could scratch the surface and destroy the glass.

Removing the oven door

1. Open the front door (1).
2. Open the clips at the hinge housing (2) on the right and left hand sides of the front door by pressing them down as illustrated in the figure.

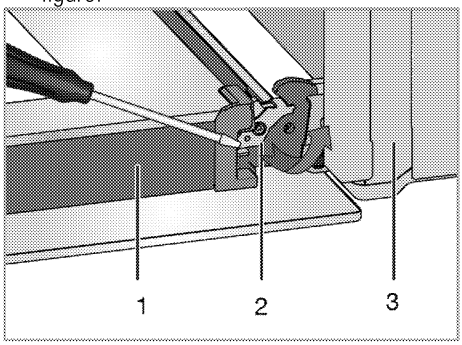

1 Door
2 Hinge lock(closed position)
3 Oven
4 Hinge lock(open position)

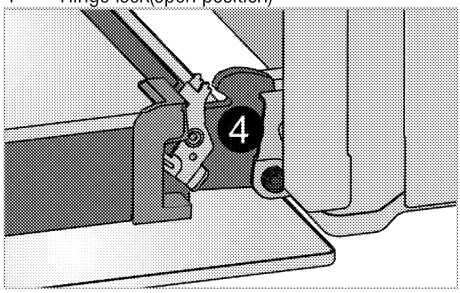

3. Move the front door to half-way.

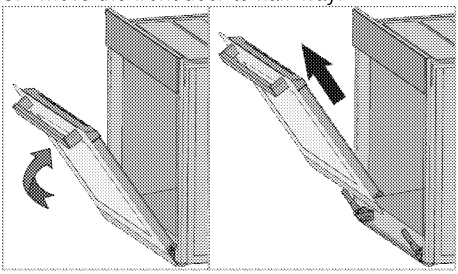

4. Remove the front door by pulling it upwards to release it from the right and left hinges.

Steps carried out during removing process should be performed in reverse order to install the door. Do not forget to close the clips at the hinge housing when reinstalling the door.

Removing the door inner glass

This feature is optional. It may not exist on your product.)

The inner glass panel of the oven door can be removed for cleaning.

1. Open the oven door.
2. Remove the metal part (1) by removing the screws that secure it.
3. To remove the plastic holders (2) , use a flat metal or plastic, e.g., a knife, slotted screwdriver, to free the fixing foot (5).
4. Push the fixing foot through the window (6) in arrow direction.

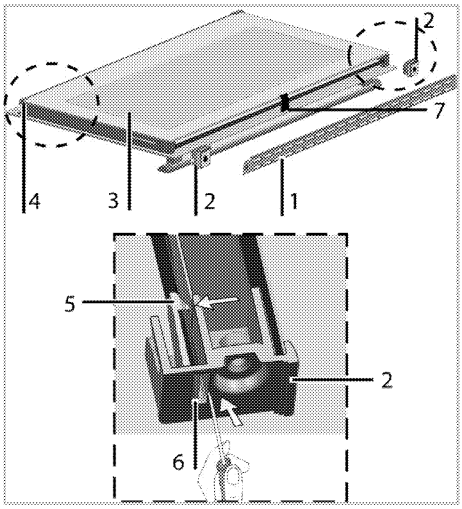

1 Metal part
2 Plastic carrier
3 Inner glass panel
4 Lower plastic slot
5 Fixing foot
6 Window
7 Part of glass holder

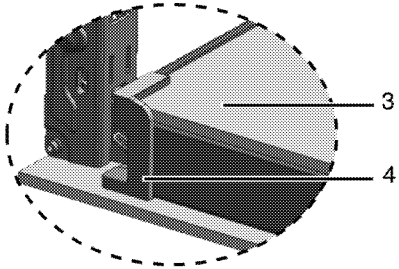

5. Pull the part of glass holder (7) in middle toward yourself to release the inner glass panels.
6. Pull the inner glass panel (3) towards yourself until it detaches from its plastic slots (4).
7. Pull Innermost glass panel towards yourself until it detaches from its plastic slots (4) like inner glass panel.
8. When reinstalling the glass panel, make sure that it is seated into the plastic slots.

Do not forget the put it back the part of glass holder to its place.

Replacing the oven lamp

DANGER:
Before replacing the oven lamp, make sure that the product is disconnected from mains and cooled down in order to avoid the risk of an electrical shock.
Hot surfaces may cause burns!

The oven lamp is a special electric light bulb that can resist up to 300 °C. See *Technical specifications, page 13* for details. Oven lamps can be obtained from Authorised Service Agents or technician with licence.

Position of lamp might vary from the figure.

The lamp used in this appliance is not suitable for household room illumination. The intended purpose of this lamp is to assist the user to see foodstuffs.

The lamps used in this appliance have to withstand extreme physical conditions such as temperatures above 50 °C.

If your oven is equipped with a round lamp:

1. Disconnect the product from mains.
2. Turn the glass cover counter clockwise to remove it.

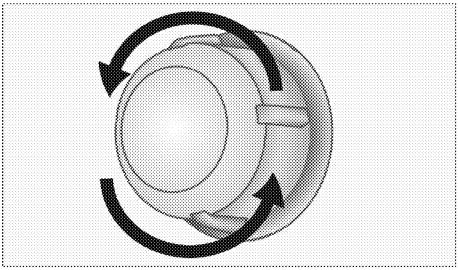

3. If your oven lamp is of type (A) shown in the figure below, remove it by rotating as shown and replace it. If it is of type (B), pull and remove it as shown in the figure and replace it.

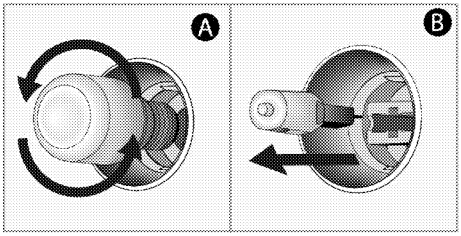

4. Install the glass cover.

If your oven is equipped with a square lamp:

1. Disconnect the product from mains.
2. Remove the wire racks as described. See *Cleaning the oven, page 39*.

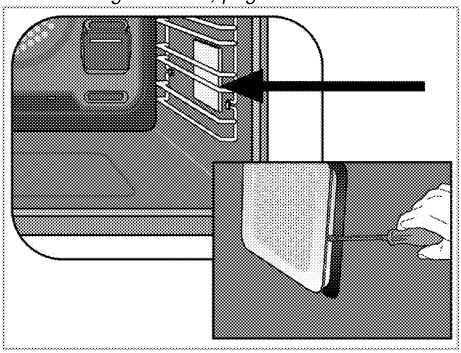

3. Remove the protective glass cover with a screwdriver.
4. If your oven lamp is of type (A) shown in the figure below, remove it by rotating as shown and replace it. If it is of type (B), pull and remove it as shown in the figure and replace it.

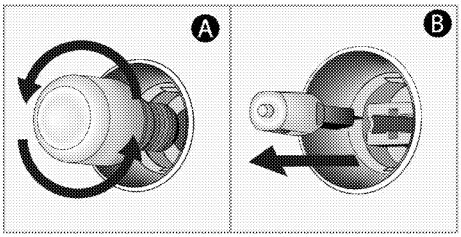

5. Install the glass cover and then the wire racks.

Annual service by an authorised person is recommended, or if any of the following conditions are noticed; incomplete ignition, appreciable yellow tipping, carbon deposition, lifting, floating, lighting back or objectionable odour.

8 Troubleshooting

Oven emits steam when it is in use.

- It is normal that steam escapes during operation. >>> *This is not a fault.*

Product emits metal noises while heating and cooling.

- When the metal parts are heated, they may expand and cause noise. >>> *This is not a fault.*

Product does not operate.

- The mains fuse is defective or has tripped. >>> *Check fuses in the fuse box. If necessary, replace or reset them.*
- Product is not plugged into the (grounded) socket. >>> *Check the plug connection.*
- Buttons/knobs/keys on the control panel do not function. >>> *Keylock may be enabled. Please disable it. (See. Using the keylock,.)*

Oven light does not work.

- Oven lamp is defective. >>> *Replace oven lamp.*
- Power is cut. >>> *Check if there is power. Check the fuses in the fuse box. If necessary, replace or reset the fuses.*

Oven does not heat.

- Function and/or Temperature are not set. >>> *Set the function and the temperature with the Function and/or Temperature knob/key.*
- In models equipped with a timer, the timer is not adjusted. >>> *Adjust the time.*
  (In products with microwave oven, timer controls only microwave oven.)
- Power is cut. >>> *Check if there is power. Check the fuses in the fuse box. If necessary, replace or reset the fuses.*

There is no ignition spark.

- No current. >>> *Check fuses in the fuse box.*
- Time is not set. >>> *Set the time.*

There is no gas.

- Main gas valve is closed. >>> *Open gas valve.*
- Gas pipe is bent. >>> *Install gas pipe properly.*

Burners are not burning properly or at all.

- Burners are dirty. >>> *Clean burner components.*
- Burners are wet. >>> *Dry the burner components.*
- Burner cap is not mounted safely. >>> *Mount the burner cap properly.*
- Gas valve is closed. >>> *Open gas valve.*
- Gas cylinder is empty (when using LPG). >>> *Replace gas cylinder.*

(In models with timer) Clock display is blinking or clock symbol is on.

- A previous power outage has occurred. >>> *Adjust the time / Switch of the product and switch it on again.*

Consult the Authorised Service Agent or technician with licence or the dealer where you have purchased the product if you can not remedy the trouble although you have implemented the instructions in this section. Never attempt to repair a defective product yourself.