Built-in Oven

User manual

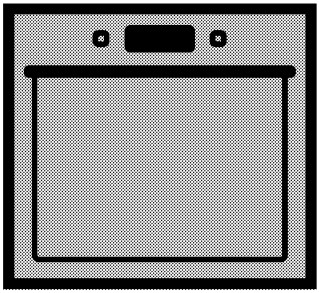

BIM32400XP

EN

285.4445.43/R.AB/28.12.2016

Please read these instructions first before using your appliance

Thank you for choosing a Beko appliance.

Please take some time to read this user manual before using your appliance, to ensure you know how to safely operate the controls and functions.

Carefully follow all unpacking and installation instructions to ensure the appliance is correctly connected and fitted prior to use.

Please write your product model and serial number on the last page of this user manual, and store in a safe location close to the appliance for easy future reference.

This user manual may also be applicable for several other models. Differences between models will be listed.

If you have any questions or concerns, please call our contact centre or find help and information online at www.beko.co.uk

Explanation of symbols used throughout this User Manual

	Important information or useful hints about usage.
	Warning of hazardous situations with regard to life and property.
	Warning of electric shock.
	Warning of risk of fire.
	Warning of hot surfaces.

Arçelik A.Ş.
Karaağaç caddesi No:2-6
34445 Sütlüce/Istanbul/TURKEY

Made in TURKEY

CE

This product was manufactured using the latest technology in environmentally friendly conditions.

1 Important instructions and warnings for safety and environment 4

General safety 4
Electrical safety 4
Product safety 5
Intended use 7
Safety for children....8
Disposing of the old product 8
Package information 8

2 General information 9

Overview 9
Package contents 10
Technical specifications 11

3 Installation 12

Before installation 12
Appliance built-under of the hob and oven configuration....13
Installation and connection 14
Future Transportation....15

4 Preparation 16

Tips for saving energy 16
Initial use....16
Time setting 16
First cleaning of the appliance 16
Initial heating....16

5 How to operate the oven 18

General information on baking, roasting and grilling18
How to operate the electric oven 18
Operating modes.... 18
How to operate the oven control unit 21
Cooking times table.... 25
How to operate the grill.... 26
Cooking times table for grilling 27

6 Maintenance and care 28

General information.... 28
Cleaning the control panel 28
Cleaning the oven 28
Removing the oven door 29
Removing the door inner glass 30
Replacing the oven lamp.... 31

7 Troubleshooting 32

8 Guarantee Details 33

1 Important instructions and warnings for safety and environment

This section contains safety instructions that will help protect from risk of personal injury or property damage. Failure to follow these instructions shall void any warranty.

General safety

- This appliance can be used by children aged from 8 years and above and persons with reduced physical, sensory or mental capabilities or lack of experience and knowledge if they have been given supervision or instruction concerning use of the appliance in a safe way and understand the hazards involved.
  Children shall not play with the appliance. Cleaning and user maintenance shall not be made by children without supervision.
- The appliance is not to be used by persons (including children) with reduced physical, sensory or mental capabilities, or lack of experience and knowledge, unless they have been given supervision or instruction.
  Children should be supervised and ensure they do not play with the appliance
- If the product is handed over to someone else for personal use or second-hand use purposes, the user manual, product labels and other relevant documents and parts should be also given.
- Installation and repair procedures must always be performed by Authorised Service Agents. The manufacturer shall not be held responsible for damages arising from procedures carried out by unauthorised persons which may also void the warranty. Before installation, read the instructions carefully.
- Do not operate the product if it is defective or has any visible damage.
- Ensure that the product function knobs are switched off after every use.

Electrical safety

- If the product has a failure, it should not be operated unless it is repaired by an Authorised Service Agent. There is the risk of electric shock!
- Only connect the product to a grounded outlet/line with the voltage and protection as specified in the “Technical specifications”. Have the grounding installation made by a qualified electrician while using the product with or without a

transformer. Our company shall not be liable for any problems arising due to the product not being earthed in accordance with the local regulations.

- Never wash the product by spreading or pouring water onto it! There is the risk of electric shock!
- The product must be disconnected during installation, maintenance, cleaning and repairing procedures.
- If the power connection cable for the product is damaged, it must be replaced by the manufacturer, its service agent or similarly qualified persons in order to avoid a hazard.
- Only use the connection cable specified in the “Technical specifications”.
- The appliance must be installed so that it can be completely disconnected from the mains supply. The separation must be provided by a switch built into the fixed electrical installation, according to construction regulations.
- Rear surface of the oven gets hot when it is in use. Make sure that the electrical connection does not contact the rear surface; otherwise, connections can get damaged.
- Do not trap the mains cable between the oven door and frame and do not route it over hot surfaces. Otherwise, cable insulation may melt and cause fire as a result of short circuit.
- Any work on electrical equipment and systems should only be carried out by authorised and qualified persons.
- In case of any damage, switch off the product and disconnect it from the mains. To do this, turn off the fuse at home.
- Make sure that fuse rating is compatible with the product.

Product safety

- WARNING: The appliance and its accessible parts become hot during use. Care should be taken to avoid touching heating elements. Children less than 8 years of age shall be kept away unless continuously supervised.
- Never use the product when your judgment or coordination is impaired by the use of alcohol and/or drugs.
- Be careful when using alcoholic drinks in your dishes. Alcohol evaporates at high temperatures and may cause fire since it can ignite when it comes into contact with hot surfaces.
- Food Poisoning Hazard: Do not let food sit in oven for more than 1

hour before or after cooking. Doing so can result in food poisoning or sickness.

- Do not place any flammable materials close to the product as the sides may become hot during use.
- During use the appliances becomes hot. Care should be taken to avoid touching heating elements inside the oven.
- Keep all ventilation slots clear of obstructions.
- Do not heat closed tins and glass jars in the oven. The pressure that would build-up in the tin/jar may cause it to burst.
- Do not place baking trays, dishes or aluminium foil directly onto the bottom of the oven. The heat accumulation might damage the bottom of the oven.
- Do not use harsh abrasive cleaners or sharp metal scrapers to clean the oven door glass since they can scratch the surface, which may result in shattering of the glass.
- Do not use steam cleaners to clean the appliance as this may cause an electric shock.
- (Varies depending on the product model.)
  Placing the wire shelf and tray onto the wire racks properly

It is important to place the wire shelf and/or tray onto the rack properly. Slide the wire shelf or tray between 2 rails and make sure that it is balanced before placing food on it (Please see the following figure).

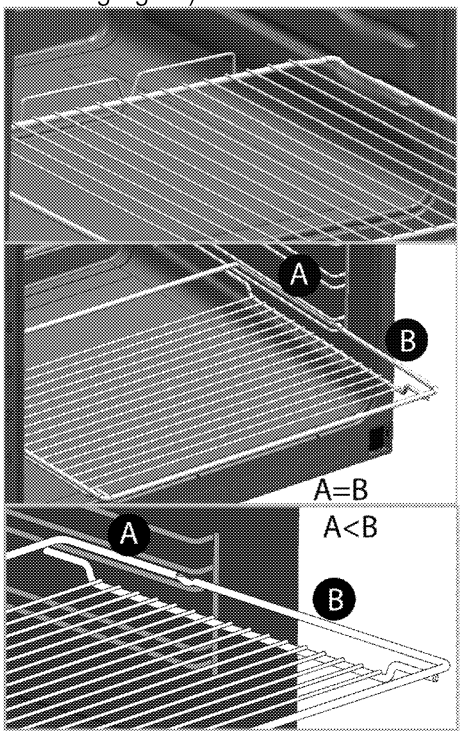

- Do not use the product if the front door glass removed or cracked.
- Do not use the oven handle to hang towels for drying. Do not hang up towel, gloves, or similar textile products when the grill function is at open door.
- Always use heat resistant oven gloves when putting in or removing dishes into/from the hot oven.

- Place the baking paper into the cooking pot or on to the oven accessory (tray, wire grill etc) together with the food and then insert all into the preheated oven. Remove the excess parts of the baking paper overflowing from the accessory or the pot in order to prevent the risk of touching the oven's heating elements. Never use the baking paper in an operating temperature higher than the indicated value for the baking paper. Do not place the baking paper directly on the base of the oven.
- WARNING: Ensure that the appliance is switched off before replacing the lamp to avoid the possibility of electric shock.
- Before the cleaning cycle, remove dirts from exterior surfaces and oven interior with a damph cloth. Remove all accessories inside of oven.
  If your product is equipped with a pyro proof accessory (Resilient against self-cleaning at high temperatures), you do not need to remove these accessories from the oven. see *Package contents, page 10*.
- Hot surfaces cause burns! Do not touch the product during self cleaning step and keep children away from it. Keep at least 30 minutes before removing the remnants.
- During pyrolytic cleaning, surfaces may become hotter than with standard use. Keep children away.
- The appliance must not be installed behind a decorative door in order to avoid overheating.

Prevention against possible fire risk!

- Ensure all electrical connections are secure and tight to prevent risk of arcing.
- Do not use damaged cables or extension cables.
- Ensure liquid or moisture is not accessible to the electrical connection point.

Intended use

- This product is designed for domestic use. Commercial use will void the guarantee.
- This appliance is for cooking purposes only. It must not be used for other purposes, for example room heating.
- This product should not be used for warming the plates under the grill, drying towels, dish cloths etc. by hanging them on the oven door handles. This product should also not be used for room heating purposes.
- The manufacturer shall not be liable for any damage caused by improper use or handling errors.

- The oven can be used for defrosting, baking, roasting and grilling food.

Safety for children

- WARNING: Accessible parts may become hot during use. Young children should be kept away.
- The packaging materials will be dangerous for children. Keep the packaging materials away from children. Please dispose of all parts of the packaging according to environmental standards.
- Electrical products are dangerous to children. Keep children away from the product when it is operating and do not allow them to play with the product.
- Do not place any items above the appliance that children may reach for.
- When the door is open, do not load any heavy object on it and do not allow children to sit on it. It may overturn or door hinges may get damaged.

Disposing of the old product

Compliance with the WEEE Directive and Disposing of the Waste Product:

This product complies with EU WEEE Directive (2012/19/EU). This product bears a classification symbol for waste electrical and electronic equipment (WEEE).
This product has been manufactured with high quality parts and materials which can be reused and are suitable for recycling. Do not dispose of the waste product with normal domestic and other wastes at the end of its service life. Take it to the collection center for the recycling of electrical and electronic equipment. Please consult your local authorities to learn about these collection centers.

Compliance with RoHS Directive:
The product you have purchased complies with EU RoHS Directive (2011/65/EU). It does not contain harmful and prohibited materials specified in the Directive.

Package information

- Packaging materials of the product are manufactured from recyclable materials in accordance with our National Environment Regulations. Do not dispose of the packaging materials together with the domestic or other wastes. Take them to the packaging material collection points designated by the local authorities.

2 General information

Overview

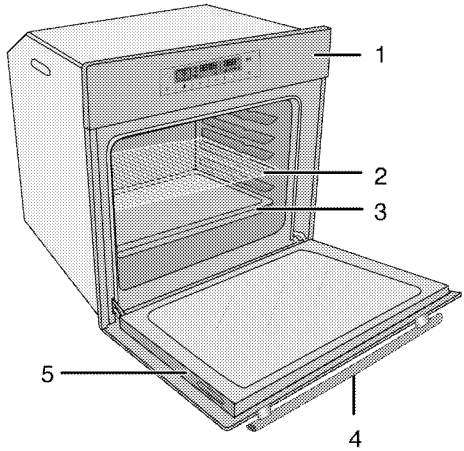

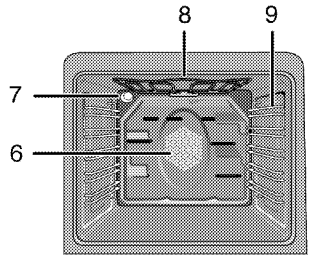

1	Control panel	6	Fan motor (behind steel plate)
2	Wire shelf	7	Lamp
3	Tray	8	Top heating element
4	Handle	9	Shelf positions
5	Door		

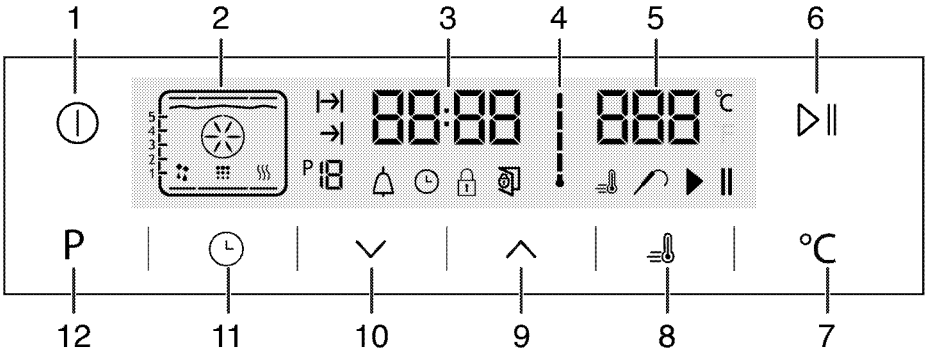

1	ON/OFF key	7	Temperature setting key
2	Function display	8	Booster symbol (rapid pre-heating)
3	Current time indicator field	9	Plus key
4	Oven Inner Temperature symbol	10	Minus key
5	Temperature indicator field	11	Adjustment key
6	Start/stop cooking key	12	Return Key to function display

Package contents

Accessories supplied can vary depending on the product model. Not every accessory described in the user manual may exist on your product.

1. **User manual**
2. **Oven tray**
   Used for pastries, frozen foods and big roasts.

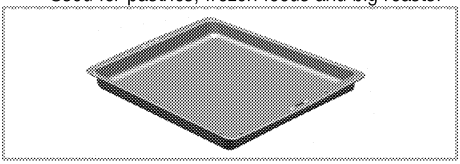

3. **Wire Shelf**
   Used for roasting and for placing the food to be baked, roasted or cooked in casserole dishes to the desired rack.

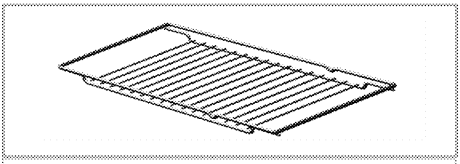

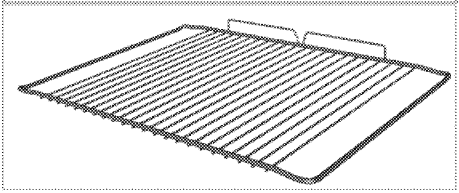

4. **Small wire shelf**
   It is placed into the tray (if supplied) in order to collect the dripping fat while grilling so that the oven is kept clean.

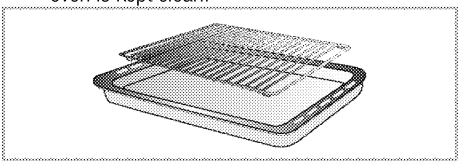

5. **Placing the wire shelf and tray onto the telescopic racks properly (This feature is optional. It may not exist on your product.)**
   Telescopic racks allow you to install and remove the trays and wire shelf easily.
   When using the tray and wire shelf with telescopic racks, make sure that the pins at the rear section of the telescopic rack stands against the edges of the wire shelf and tray.

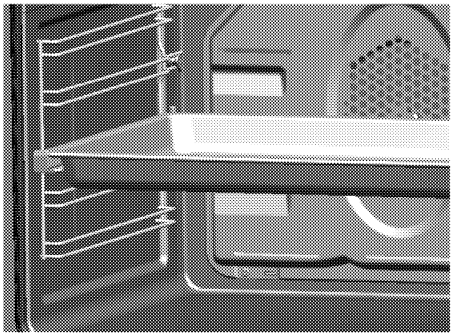

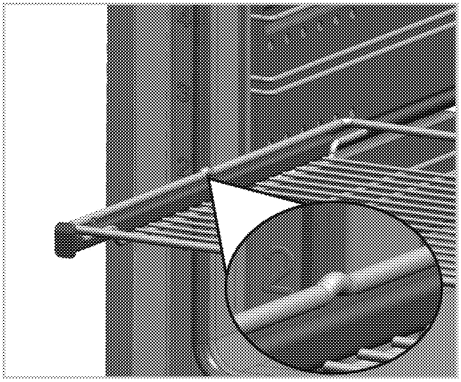

Technical specifications

Voltage / frequency	**220-240 V ~ 50 Hz**
Total power consumption	3.1 kW
Fuse	16 A
Cable type / section	H05VV-FG 3 x 1,5 mm^2 or equivalent
External dimensions (height / width / depth)	**595 mm/594 mm/567 mm**
Installation dimensions (height / width / depth)	**590 or 600 mm/560 mm/min. 550 mm
Main oven	**Multifunction oven**
Inner lamp	15/25 W
Grill power consumption	2.2 kW

Basics: Information on the energy label of electrical ovens is given in accordance with the EN 60350-1 / IEC 60350-1 standard. Those values are determined under standard load with bottom-top heater or fan assisted heating (if any) functions.
Energy efficiency class is determined in accordance with the following prioritization depending on whether the relevant functions exist on the product or not. 1-Cooking with eco-fan, 2- Turbo slow cooking, 3- Turbo cooking, 4- Fan assisted bottom/top heating, 5-Top and bottom heating.

** See. *Installation, page 12*.

Technical specifications may be changed without prior notice to improve the quality of the product.

Figures in this manual are schematic and may not exactly match your product.

Values stated on the product labels or in the documentation accompanying it are obtained in laboratory conditions in accordance with relevant standards. Depending on operational and environmental conditions of the product, these values may vary.

3 Installation

Product must be installed by a qualified person in accordance with the regulations in force. The manufacturer shall not be held responsible for damages arising from procedures carried out by unauthorized persons which may also void the warranty.

Preparation of location and electrical installation for the product is under customer's responsibility.

DANGER:
The product must be installed in accordance with all local electrical regulations.

DANGER:
Prior to installation, visually check if the product has any defects on it. If so, do not have it installed.
Damaged products cause risks for your safety.

Before installation

The appliances must not be installed behind a decorative door in order to avoid overheating.
The appliance is intended for installation in commercially available kitchen cabinets. A safety distance must be left between the appliance and the kitchen walls and furniture. See figure (values in mm).

- Surfaces, synthetic laminates and adhesives used must be heat resistant (100 °C minimum).
- Kitchen cabinets must be set level and fixed.
- If there is a drawer beneath the oven, a shelf must be installed in order to seperate from the oven and drawer.
- Carry the appliance with at least two persons.
- Hold the oven from the slots for handling on both sides to move it.
- Before installing the product, remove all materials and documents inside.
- Kitchen furniture must be in compliance with the dimensions given in the figure below. At the rear section of the kitchen furniture, an opening must be cut out with the dimensions given in the figure below to ensure sufficient ventilation.
- The following installation drawings are representational and may not match exactly with your appliance.

Do not install the appliance next to refrigerators or freezers. The heat emitted by the appliance will lead to an increased energy consumption of cooling appliances.

The door and/or handle must not be used for lifting or moving the appliance.

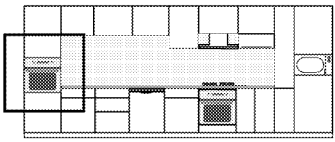

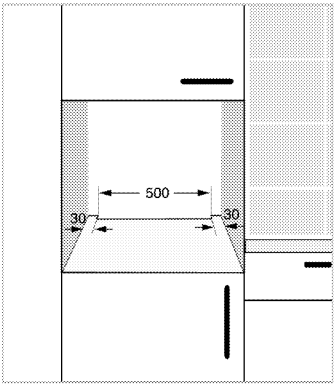

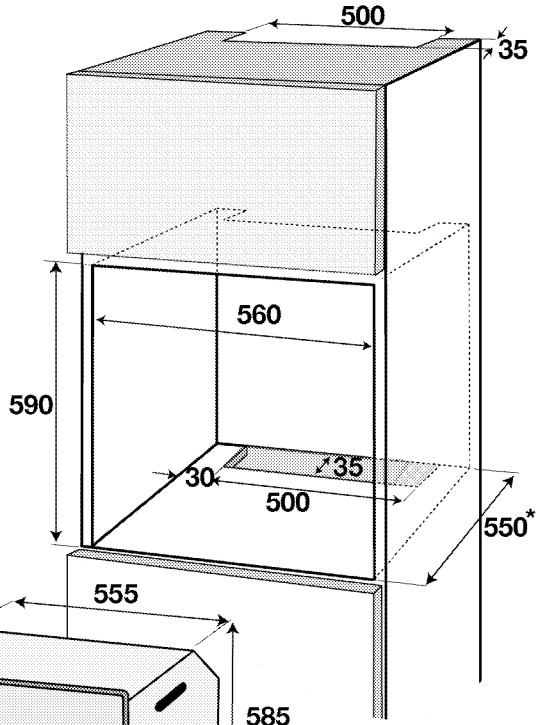

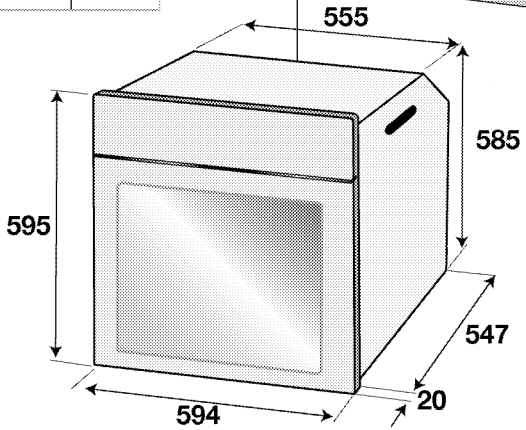

* min.

Appliance built-under of the hob and oven configuration

Description of hob	65 - 77 LT			80 - 82 LT	
	30 mm Counter	40 mm Counter	50 mm Counter	40 mm Counter	50 mm Counter
30 cm Induction Hob	√	√	√	√	√
60 cm Side Control Metal Gas Hob	√	√	√	√	√
30 cm Gas Hob (1 Wok)	√	√	√	-	√
30 cm Gas Hob (2 Gas)	-	√	√	-	√
90 cm Induction Hob with TFT Display	-	√	√	-	-
80 cm Induction Hob	-	√	√	-	√
80 cm Vitroceramic Hob with Touch slider control	√	√	√	-	√
70 cm Metal Gas Hob	√	√	√	-	√
70 cm Front Control Gas on Glass Hob	√	√	√	-	√

3 Wok Hob Burner Configuration	√	√	√	√	√
60 cm Front Control Gas on Glass Hob	√	√	√	-	√
60 cm Front Control Metal Gas Hob	√	√	√	-	√
60 cm Front Control Flat Metal Gas Hob	√	√	√	-	√
70 cm Front Control Flat Metal Gas Hob	√	√	√	-	√
30 cm Vitroceramic Hob	√	√	√	√	√
60 cm Induction Hob with Touch slider control	-	√	√	-	√
60 cm Induction Hob with 8 induction zones	-	√	√	-	-
60 cm Induction Hob with Basic Touch control	-	√	√	-	√
80 cm Induction Hob with Touch slider control	-	√	√	-	√
60 cm Vitroceramic Hob with Touch slider control	√	√	√	-	√
60 cm Vitroceramic Hob with Basic Touch control	√	√	√	√	√
80 cm Vitroceramic Hob with Touch slider control	√	√	√	-	√

Installation and connection

- The product must be installed in accordance with all local gas and electrical regulations.

Electrical connection

Connect the product to a grounded outlet/line protected by a miniature circuit braker of suitable capacity as stated in the "Technical specifications" table. Have the grounding installation made by a qualified electrician while using the product with or without a transformer. Our company shall not be liable for any damages that will arise due to using the product without a grounding installation in accordance with the local regulations.

DANGER:
The product must be connected to the mains supply only by an authorised and qualified person. The product's warranty period starts only after correct installation.
Manufacturer shall not be held responsible for damages arising from procedures carried out by unauthorised persons.

DANGER:
The power cable must not be clamped, bent or trapped or come into contact with hot parts of the product.
A damaged power cable must be replaced by a qualified electrician. Otherwise, there is risk of electric shock, short circuit or fire!

- Connection must comply with national regulations.
- The mains supply data must correspond to the data specified on the type label of the product. Open the front door to see the type label.
- Power cable of your product must comply with the values in "Technical specifications" table.

DANGER:
Before starting any work on the electrical installation, disconnect the product from the mains supply.
There is the risk of electric shock!

Connecting the power cable

1. **If a power cable is not supplied together with your product,** a power cable that you would select from the table in accordance with the electrical installation at your home must be connected to your product by following the instructions in cable diagram.

This product must only be connected by a qualified electrician such as a technician from the local electricity company or NICEIC registered contractor to a suitable double-pole control unit with a minimum contact clearance of 3 mm in all poles. This control unit must be installed accordance with the IEE regulation. Failure to obey this instruction may cause operational problems and invalidate the product warranty.

Additional protection by a residual current circuit breaker is recommended.

2. Open the terminal block cover with a screwdriver.
3. Insert the power cable through the cable clamp below the terminal and secure it to the main body with the integrated screw on cable clamping component.
4. Connect the cables according to the supplied diagram.

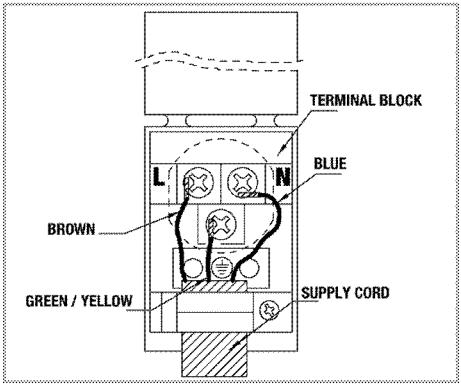

5. After completing the wire connections, close the terminal block cover.
6. Route the power cable so that it will not contact the product and get squeezed between the product and the wall.

> Power cable must not be longer than 2 m because of safety reasons.

Installing the product

1. Slide the oven into the cabinet, align and secure it while making sure that the power cable is not broken and/or trapped.

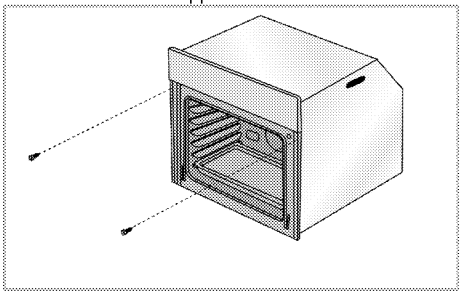

Secure the oven with 2 screws as illustrated.
After the installation, make sure that the screws are sufficiently tightened and the oven does not move.
Oven may tip over during use if it is not installed as per the instructions and if the screws are not sufficiently tightened.

For products with cooling fan (It may not exist on your product.)

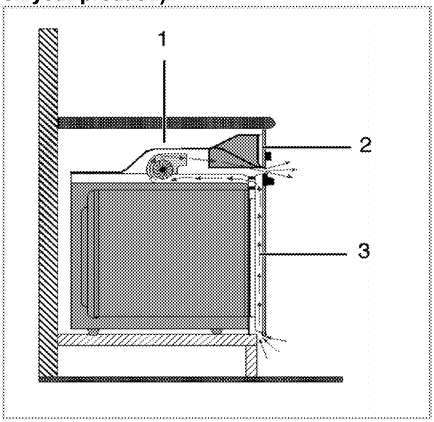

1 Cooling fan
2 Control panel
3 Door

The built-in cooling fan cools both the built-in cabinet and the front of the product.

> Cooling fan continues to operate for about 20-30 minutes after the oven is switched off.
> If you have cooked by programming the timer of the oven, cooling fan will also be switched off at the end of the cooking time together with all functions.

Final check

1. Operate the product.
2. Check the functions.

Future Transportation

- Keep the product's original carton and transport the product in it. Follow the instructions on the carton. If you do not have the original carton, pack the product in bubble wrap or thick cardboard and tape it securely.
- To prevent the wire grill and tray inside the oven from damaging the oven door, place a strip of cardboard onto the inside of the oven door that lines up with the position of the trays. Tape the oven door to the side walls.
- Do not use the door or handle to lift or move the product.

> Do not place any objects onto the product and move it in upright position.

> Check the general appearance of your product for any damages that might have occurred during transportation.

4 Preparation

Tips for saving energy

The following information will help you to use your appliance in an ecological way, and to save energy:

- Use dark coloured or enamel coated cookware in the oven since the heat transmission will be better.
- While cooking your dishes, perform a preheating operation if it is advised in the user manual or cooking instructions.
- Do not open the door of the oven frequently during cooking.
- Try to cook more than one dish in the oven at the same time whenever possible. You can cook by placing two cooking vessels onto the wire shelf.
- Cook more than one dish one after another. The oven will already be hot.
- You can save energy by switching off your oven a few minutes before the end of the cooking time. Do not open the oven door.
- Defrost frozen dishes before cooking them.

Initial use

Time setting

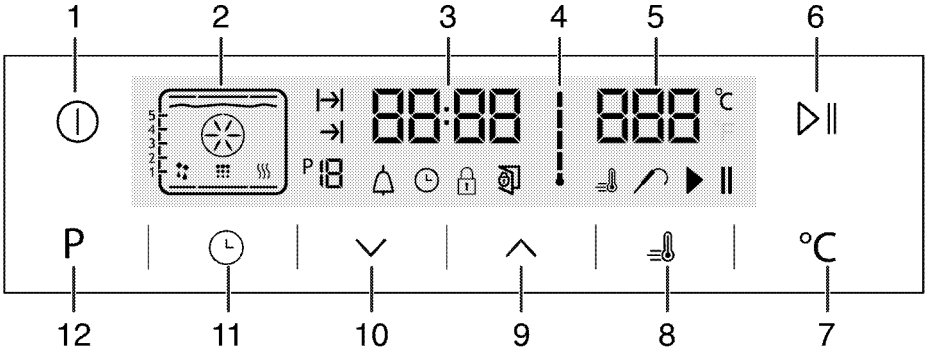

1 ON/OFF key
2 Function display
3 Current time indicator field
4 Oven Inner Temperature symbol
5 Temperature indicator field
6 Start/stop cooking key
7 Temperature setting key
8 Booster symbol (rapid pre-heating)
9 Plus key
10 Minus key
11 Adjustment key
12 Return Key to function display

1. At the inital operation of the oven symbol lights up, touch ∧ / ∨ keys to set the hour.
2. Confirm the setting by touching symbol and wait for 4 seconds without touching any keys to confirm.

> If the current time is not set, time indicator will start increasing/moving up from 12:00. symbol will be activated to indicate that the current time has not been set. It will disappear as soon as the time is set.

First cleaning of the appliance

> The surface might get damaged by some detergents or cleaning materials.
> Do not use aggressive detergents, cleaning powders/creams or any sharp objects during cleaning.
> Do not use harsh abrasive cleaners or sharp metal scrapers to clean the oven door glass since they can scratch the surface, which may result in shattering of the glass.

1. Remove all packaging materials.
2. Wipe the surfaces of the appliance with a damp cloth or sponge and dry with a cloth.

Initial heating

Heat up the product for about 30 minutes and then switch it off. Thus, any production residues or layers will be burnt off and removed.

WARNING
Hot surfaces cause burns!
Product may be hot when it is in use. Never touch the hot burners, inner sections of the oven, heaters and etc. Keep children away. Always use heat resistant oven gloves when putting in or removing dishes into/from the hot oven.

Electric oven

1. Take all baking trays and the wire grill out of the oven.
2. Close the oven door.
3. Select Static position.
4. Select the highest grill power; See *How to operate the electric oven, page 18*.
5. Operate the oven for about 30 minutes.
6. Turn off your oven; See *How to operate the electric oven, page 18*

Grill oven

1. Take all baking trays and the wire grill out of the oven.
2. Close the oven door.
3. Select the highest grill power; see *How to operate the grill, page 26*.
4. Operate the grill about 30 minutes.
5. Turn off your grill; see *How to operate the grill, page 26*

Smoke and smell may emit for a couple of hours during the initial operation. This is quite normal. Ensure that the room is well ventilated to remove the smoke and smell. Avoid directly inhaling the smoke and the smell that emits.

5 How to operate the oven

General information on baking, roasting and grilling

WARNING
Hot surfaces cause burns!
Product may be hot when it is in use. Never touch the hot burners, inner sections of the oven, heaters and etc. Keep children away. Always use heat resistant oven gloves when putting in or removing dishes into/from the hot oven.

DANGER:
Be careful when opening the oven door as steam may escape.
Exiting steam can scald your hands, face and/or eyes.

Tips for baking

- Use non-sticky coated appropriate metal plates or aluminum vessels or heat-resistant silicone moulds.
- Make best use of the space on the rack.
- Place the baking mould in the middle of the shelf.
- Select the correct rack position before turning the oven or grill on. Do not change the rack position when the oven is hot.
- Keep the oven door closed.

Tips for roasting

- Treating whole chicken, turkey and large piece of meat with dressings such as lemon juice and black pepper before cooking will increase the cooking performance.
- It takes about 15 to 30 minutes longer to roast meat with bones when compared to roasting the same size of meat without bones.
- Each centimeter of meat thickness requires approximately 4 to 5 minutes of cooking time.
- Let meat rest in the oven for about 10 minutes after the cooking time is over. The juice is better distributed all over the roast and does not run out when the meat is cut.
- Fish should be placed on the middle or lower rack in a heat-resistant plate.

Tips for grilling

When meat, fish and poultry are grilled, they quickly get brown, have a nice crust and do not get dry. Flat pieces, meat skewers and sausages are particularly suited for grilling as are vegetables with high water content such as tomatoes and onions.

- Distribute the pieces to be grilled on the wire shelf or in the baking tray with wire shelf in such a way that the space covered does not exceed the size of the heater.
- Slide the wire shelf or baking tray with grill into the desired level in the oven. If you are grilling on the wire shelf, slide the baking tray to the lower rack to collect fats. Add some water in the tray for easy cleaning.

Foods that are not suitable for grilling carry the risk of fire. Only grill food which is suitable for intensive grilling heat.
Do not place the food too far in the back of the grill. This is the hottest area and fatty food may catch fire.

How to operate the electric oven

Rack positions (For models with wire shelf)

It is important to place the wire shelf onto the side rack correctly. Wire shelf must be inserted between the side racks as illustrated in the figure.
Do not let the wire shelf stand against the rear wall of the oven. Slide your wire shelf to the front section of the rack and settle it with the help of the door in order to obtain a good grill performance.

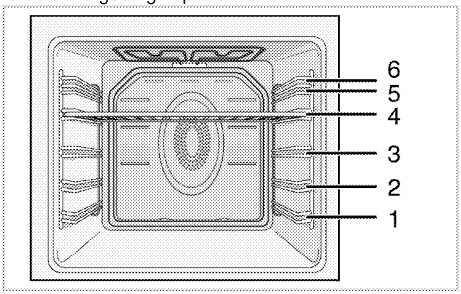

Operating modes

The order of operating modes shown here may be different from the arrangement on your product.

1. Top and bottom heating

Food is heated simultaneously from the top and bottom. For example, it is suitable for cakes, pastries, or cakes and casseroles in baking moulds. Cook with one tray only.
Suitable rack position will be displayed on screen.

2. **Fan supported bottom/top heating**

Hot air heated by the bottom and top heaters is evenly distributed throughout the oven rapidly by means of the fan. Cook with one tray.

3. **Fan Heating**

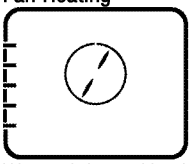

Warm air heated by the rear heater is evenly distributed throughout the oven rapidly by means of the fan. It is suitable for cooking your meals in different rack levels and preheating is not required in most cases. Suitable for cooking with multi trays.

> When the oven door is opened, the fan motor will not run in order to keep the hot air inside.

4. **"3D" function**

Top heating, bottom heating and fan assisted heating are in operation. Food is cooked evenly and quickly all around. Cook with one tray only.

5. **Pizza function**

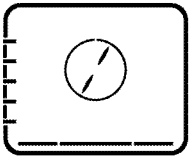

The bottom heating and fan assisted heating are in operation. Suitable for baking pizza.

6. **Full grill+Fan**

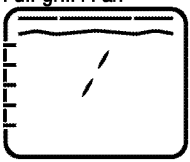

Hot air heated by the full grill is distributed very fast in the oven by means of the fan. It is suitable for grilling large amount of meat.

- Put big or medium-sized portions in correct rack position under the grill heater for grilling.
- Set the temperature to maximum level.
- Turn the food after half of the grilling time.

7. **Full grill**

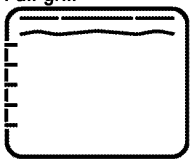

Large grill at the ceiling of the oven is in operation. It is suitable for grilling large amount of meat.

- Put big or medium-sized portions in correct rack position under the grill heater for grilling.
- Set the temperature to maximum level.
- Turn the food after half of the grilling time.

8. **Grill**

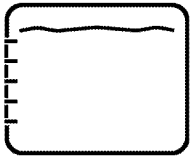

Small grill at the ceiling of the oven is in operation. Suitable for grilling and gratin dishes.

- Put small or medium-sized portions in correct shelf position under the grill heater for grilling.
- Set the temperature to maximum level.
- Turn the food after half of the grilling time.

9. **Slow cooking/Eco Fan Heating**

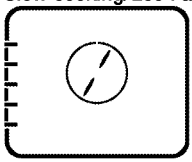

To save power, you can use this function instead of the cooking operations that you would perform by using Fan Heating at 160-220°C temperature range. But, the cooking time will increase a little bit.

Cooking times related to this function are indicated in '**Slow cooking/Eco Fan Heating**' table.

10. **Bottom heating**

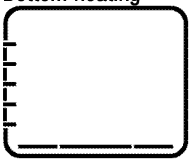

Only bottom heating is in operation. It is suitable for pizza and for subsequent browning of food from the bottom.

11. **Keep warm**

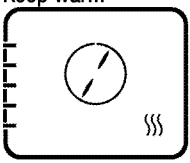

Used for keeping food at a temperature ready for serving for a long period of time.

12. **Operating with fan**

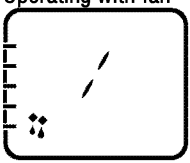

The oven is not heated. Only the fan (in the rear wall) is in operation. Suitable for thawing frozen granular food slowly at room temperature and cooling down the cooked food.

13. **Pyrolysis - economy mode**

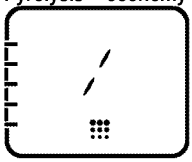

This function allows the oven to clean itself at a high temperature. It is recommended for lightly soiled ovens. Read the description in the cleaning section to use this function see, *page 28*.

14. **Pyrolysis**

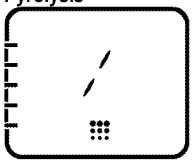

This function allows the oven to clean itself at a high temperature. Read the description in the cleaning section to use this function see, *page 28*.

15. **Easy steam cleaning**
(This feature is optional. It may not exist on your product.)

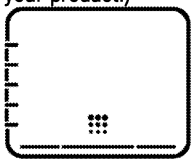

This function enables the dirt (having waited not for too long) in the oven to get soft and be cleaned easily. Please see "Cleaning - easy steam cleaning" section for easy steam cleaning.

How to operate the oven control unit

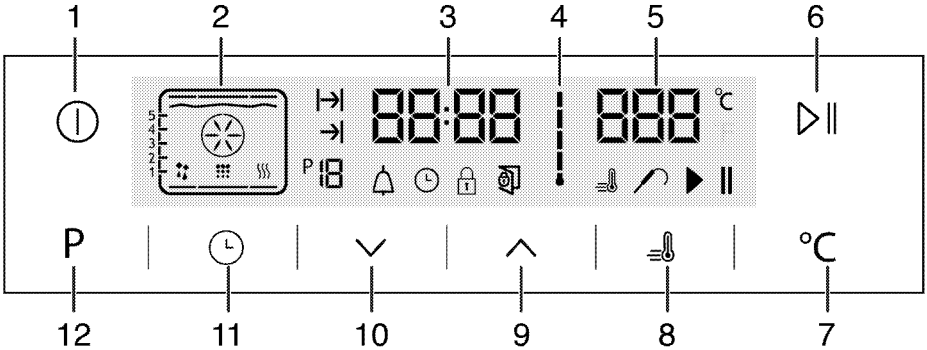

1 ON/OFF key
2 Function display
3 Current time indicator field
4 Oven Inner Temperature symbol
5 Temperature indicator field
6 Start/stop cooking key
7 Temperature setting key
8 Booster symbol (rapid pre-heating)
9 Plus key
10 Minus key
11 Adjustment key
12 Return Key to function display

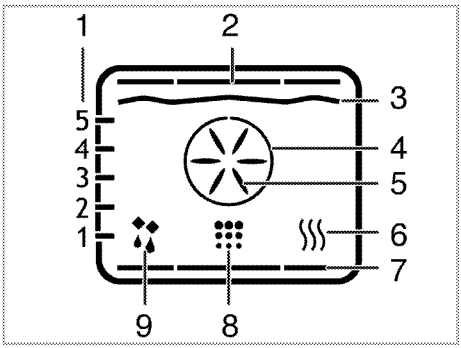

1 Shelf positions
2 Top heater
3 Grill heater
4 Boost heater
5 Boost fan
6 Keep warm
7 Bottom heater
8 Cleaning position
9 Operating with fan position

: Cooking Time symbol
: End of Cooking Time symbol
P : Function number
: Alarm symbol
: Clock symbol
: Keylock symbol
: Open door symbol
: Booster symbol (rapid pre-heating)
: Meat Probe symbol
: Cooking pause symbol
: Cooking starting symbol

Functions vary depending on the product model!

Function table:
Function table indicates the operating functions that can be used in the oven and their respective maximum and minimum temperatures.

Function table	Recommended temperature (°C)	Temperature range (°C)
Top and bottom heating	200	40-280
Fan supported bottom/top heating	175	40-280
Fan assisted cooking	180	40-280

"3D" function	205	40-280
Pizza function	210	40-280
Fan assisted large grill	200	40-280
Full grill	280	40-280
Low grill	280	40-280
Eco Fan Heating	180	160-220
Bottom heating	180	40-220
Warm keeping	60	40-100

Maximum adjustable cooking time in modes except warm keeping is limited with 6 hours due to safety reasons. Program will be cancelled in case of power failure. You must reprogram the oven.

While making any adjustment, related symbols on the clock will flash.

Current time cannot be set while the oven is operating in any function, or if semi-automatic or full automatic programming is made on the oven.

Even if the oven is off, oven lamp lights up when the oven door is opened.

How to operate the oven

1. Touch the ⏻ key for approx. 2 seconds to open the oven.

» First operating function appears on display after the oven turns on. When the display is in this mode, cooking time, the end of cooking time and Booster (quick heating) function can be set.

Oven will switch off automatically within 20 seconds if no oven setting is made on this screen.

Manual cooking by selecting temperature and operating function

You can do cooking by selecting temperature and operating function specific to your meal, manually controlling without setting the cooking duration.

1. First operating function appears on display after touching ⏻ button to open the oven.
2. Select the operating function by touching the ∧/∨ keys.
3. If you desire to change the temperature that is recommended for operating function, enable the temperature field by touching ℃ button.

» ℃ symbol flashes.

4. Set the desired temperature touching ∧/∨ keys.
5. Confirm the temperature setting by touching ℃ key.
6. Put your dish into the oven.
7. Touch ▶‖ key to start cooking if temperature and operating function are appropriate. ▶ symbol appears on display.

» Your oven will readily start operating in the selected function and will increase the inner temperature to the set temperature. Each grades of the inner temperature symbol will be lit as inner temperature reaches to the set temperature. Additional active heaters and recommended tray position appear in the Function display.

8. The oven does not turn off automatically due to the manual cooking without setting the cooking time. You can finish cooking by touching ▶‖ key once again.

» The oven finishes the cooking and ‖ symbol appears on display.

9. Touch the ⏻ button for approx. 2 seconds to close the oven.

Cooking by setting the cooking time;

You can ensure that the oven turns off by selecting temperature and operating function specific to your meal and setting the cooking time, manually controlling without setting the cooking duration.

1. First operating function appears on display after touching ⏻ button to open the oven.
2. Select the operating function by touching the ∧/∨ keys.
3. If you desire to change the temperature that is recommended for operating function, enable the temperature field by touching ℃ button.

» ℃ symbol flashes.

4. Set the desired temperature touching ∧/∨ keys.
5. Confirm the temperature setting by touching ℃ key.
6. Touch 🕒 until |→| symbol appears on display for cooking time.
7. Set the cooking time by touching ∧/∨ keys and confirm the setting by touching 🕒 key.

» Once the Cooking Time is set, |→| symbol will appear on display continuously.

8. Put your dish into the oven.
9. Touch ▶‖ key to start cooking if temperature, operating function and cooking time are appropriate. ▶ symbol appears on display.

» The oven will be heated up to the set temperature and will maintain this temperature until the end of the cooking time you selected.
» Your oven will readily start operating in the selected function and will increase the inner temperature to the set temperature. It maintains this temperature until the end of the set cooking time. Each grades of the inner temperature symbol will be lit as inner temperature reaches to the set temperature. Additional active heaters and recommended tray position appear in the Function display.

10. After the cooking process is completed, **"End"** appears on the display and the alarm sounds.
11. Touch any key to silence the alarm.

» Alarm stops and the oven finishes operating automatically.

Setting the the end of cooking time to a later time;

You can ensure that the oven runs and turns off automatically by setting temperature and operating function specific to your meal, the cooking time and end of cooking to a later time, manually controlling without setting the cooking duration.

1. First operating function appears on display after touching ⏻ button to open the oven.
2. Select the operating function by touching the ∧/∨ keys.
3. If you desire to change the temperature that is recommended for operating function, enable the temperature field by touching ℃ button.

» ℃ symbol flashes.

4. Set the desired temperature touching ∧/∨ keys.
5. Confirm the temperature setting by touching ℃ key.
6. Touch 🕒 until |→| symbol appears on display for cooking time.
7. Set the cooking time by touching ∧/∨ keys and confirm the setting by touching 🕒 key.

» Once the Cooking Time is set, |→| symbol will appear on display continuously.

8. Touch 🕒 until →| symbol appears on display for the end of cooking time.
9. Set the cooking time by touching ∧/∨ buttons and confirm the setting by touching 🕒 key.

» Once the the end of cooking time is set, →| symbol will appear on display continuously.

10. Put your dish into the oven.
11. Touch ▶‖ key to start cooking if temperature, operating function, cooking time and the end of cooking time are appropriate. ▶ symbol appears on display.

» Oven timer automatically calculates the startup time for cooking by deducting the cooking time from the end of cooking time you have set. Selected operation mode is activated when the startup time of cooking has come and the oven is heated up to the set temperature. It maintains this temperature until the end of the set cooking time. Each grades of the inner temperature symbol will be lit as inner temperature reaches to the set temperature. Additional active heaters and recommended tray position appear in the Function display.

12. After the cooking process is completed, **"End"** appears on the display and the alarm sounds.
13. Touch any key to silence the alarm.

» Alarm stops and the oven finishes operating automatically.

> ℹ If you want to cancel only cooking time or cooking time plus the end of cooking time after you have set them, you need to reset the cooking time.

Setting the booster (Quick Pre-heating)

Use Booster (Rapid Pre-heating) function to make the oven reach the desired temperature faster.

> ℹ Booster cannot be selected in defrosting, keeping warm and cleaning positions. Booster settings will be cancelled in case of power outage.

1. Touch 🌡 key after setting the temperature, operating function, cooking time and the end of cooking time.

» 🌡 symbol appears continuously and booster (rapid pre-heating) setting is enabled.
» Booster symbol disappears as soon as the oven reaches the desired temperature and oven resumes operating in the function it was in before the Booster function.

2. Touch the 🌡 key again in order to cancel booster function.

» 🌡 symbol disappears and booster (rapid pre-heating) setting is disabled.

Switching off the electric oven

Touch ⏻ key to switch off the oven.

Activating the keylock

You can prevent oven from being intervened with by activating the key lock function.

1. Touch 🕒 until 🔒 symbol appears on display.

» **"OFF"** will appear on the display.

2. Press ∧ to activate the key lock.

» Once the key lock is activated, **"On"** appears on the display and the symbol remains lit. Confirm by touching .

Oven keys are not functional when the key lock is activated. Key lock will not be cancelled in case of power failure.

To deactivate the keylock,

1. Touch until symbol appears on display.

» **"On"** will appear on the display.

2. Disable the key lock by pressing the key.

» "OFF" will appear once the key lock is deactivated. Confirm by touching .

Oven keys are not functional when the Key lock function is activated. Key lock settings will not be cancelled in case of power outage.

Setting the alarm clock

You can use the timer of the product for any warning or reminder apart from the cooking program.
The alarm clock has no influence on the functions of the oven. It is only used as a warning. For example, this is useful when you want to turn food in the oven at a certain point of time. Timer will give an audio warning at the end of the set time.

1. Touch until symbol appears on display.

Maximum alarm time can be 23 hours and 59 minutes.

2. Set the alarm duration by using / keys.

» symbol will remain lit and the alarm time will appear on the display once the alarm time is set.

3. At the end of the alarm time, symbol starts flashing and the audio warning is heard.

Turning off the alarm

1. Audio warning sounds for 2 minutes. To stop the audio warning, just press any key.

» Audio warning will be silenced and current time will be displayed.

Cancelling the alarm;

1. Touch until symbol appears on display in order to cancel the alarm.
2. Press and hold key until **"00:00"** is displayed.

Alarm time will be displayed. If the alarm time and cooking time are set concurrently, shortest time will be displayed.

Changing the time of the day

1. Touch key in short intervals until symbol appears on display.
2. Touch / keys to set the hour.
3. Confirm the setting by touching symbol and wait for 4 seconds without touching any keys to confirm.

Current time settings are canceled in case of power failure. It needs to be readjusted. Current time can not be changed when any of the oven functions is in use.

Adjusting the volume

1. While the oven is in Standby mode, touch key in short intervals until **'VOL'** appears on display.
2. Press / keys to set one of L0, L1 or L2 tones.
3. Press key or wait for 4 seconds without touching any keys to confirm the setting

Adjusting the Eco lamp setting

1. While the oven is in Standby mode, touch key in short intervals until **'LP'** appears on display.
2. Press / keys to set On or ECO option.
3. Press key or wait for 4 seconds without touching any keys to confirm the setting
4. When set to ON; while the oven door is open in Standby mode and during operation the lamp is turned ON continuously.
5. When set to ECO; while the oven door is open in Standby mode and during operation the lamp is turned ON and then turned OFF after 15 seconds.

If any key is touched during operation (excluding and keys) the lamp is turned ON and then turned OFF after 15 seconds.

Cooking times table

The timings in this chart are meant as a guide. Timings may vary due to temperature of food, thickness, type and your own preference of cooking.

Baking and roasting

1st rack of the oven is the **bottom** rack.

Dish	Cooking level number		Rack position	Temperature (°C)	Cooking time (approx. in min.)
Cakes in tray*	One level		3	175	25 ... 35
Cakes in mould*	One level		2	180	50 ... 60
Cakes in cooking paper*	One level		3	165	20 ... 30
	2 levels		1 - 3	165	35 ... 45
	3 levels		1 - 3 - 5	165	40 ... 55
Sponge cake*	One level		3	200	8 ... 12
	2 levels		1 - 5	200	15 ... 20
	3 levels		1 - 3 - 5	175	20 ... 30
Cookies*	One level		3	175	25 ... 30
	2 levels		1 - 3	165	35 ... 45
	3 levels		1 - 3 - 5	165	35 ... 45
Dough pastry*	One level		2	200	30 ... 40
	2 levels		1 - 5	200	45 ... 55
	3 levels		1 - 3 - 5	200	45 ... 55
Rich pastry*	One level		2	200	25 ... 35
	2 levels		1 - 3	200	35 ... 45
	3 levels		1 - 3 - 5	200	35 ... 45
Leaven*	One level		2	200	35 ... 45
Lasagna*	One level		2 - 3	200	30 ... 40
Pizza*	One level		2	200 ... 220	15 ... 20
	One level		3	200	10 ... 15
Beef steak (whole) / Roast	One level		3	25 min. 250/max then 180 ... 190	100 ... 120
Leg of Lamb (casserole)	One level		3	25 min. 250/max then 190	70 ... 90
	One level		3	25 min. 250/max then 190	60 ... 80
Roasted chicken	One level		2	15 min. 250/max then 180 ... 190	60 ... 70
	One level		2	15 min. 250/max then 180 ... 190	55 ... 65
Turkey (5.5 kg)	One level		1	25 min. 250/max then 180 ... 190	150 ... 210
	One level		1	25 min. 250/max then 180 ... 190	150 ... 210
Fish	One level		3	200	20 ... 30
	One level		3	200	20 ... 30

When cooking with 2 trays at the same time, place the deeper tray on the upper rack and the other one on the lower rack.
* It is suggested to perform preheating for all foods.

Eco Fan Heating

Do not change the cooking temperature after cooking starts in Eco Fan Heating mode.

Do not open the door during cooking in the Eco Fan Heating mode.

Dish	Cooking level number	Rack position	Temperature (°C)	Cooking time (approx. in min.)
Cakes in cooking paper	One level	3	200	35 ... 40
Cookies	One level	3	200	30 ... 35
Dough pastry	One level	3	200	40 ... 45
Rich pastry	One level	3	200	40 ... 45

Tips for baking cake

- If the cake is too dry, increase the temperature by 10°C and decrease the cooking time.
- If the cake is wet, use less liquid or lower the temperature by 10°C.
- If the cake is too dark on top, place it on a lower rack, lower the temperature and increase the cooking time.
- If cooked well on the inside but sticky on the outside use less liquid, lower the temperature and increase the cooking time.

Tips for baking pastry

- If the pastry is too dry, increase the temperature by 10°C and decrease the cooking time. Dampen the layers of dough with a sauce composed of milk, oil, egg and yoghurt.
- If the pastry takes too long to bake, pay care that the thickness of the pastry you have prepared does not exceed the depth of the tray.
- If the upper side of the pastry gets browned, but the lower part is not cooked, make sure that the amount of sauce you have used for the pastry is not too much at the bottom of the pastry. Try to scatter the sauce equally between the dough layers and on the top of pastry for an even browning.

Cook the pastry in accordance with the mode and temperature given in the cooking table. If the bottom part is still not browned enough, place it on one lower rack next time.

Tips for cooking vegetables

- If the vegetable dish runs out of juice and gets too dry, cook it in a pan with a lid instead of a tray. Closed vessels will preserve the juice of the dish.
- If a vegetable dish does not get cooked, boil the vegetables beforehand or prepare them like canned food and put in the oven.

How to operate the grill

WARNING
Close oven door during grilling.
Hot surfaces may cause burns!

Switching on the grill

1. First operating function appears on display after touching ⏻ button to open the oven.
2. Touch ∧/∨ to select the desired grill function.
3. If you desire to change the temperature that is recommended for operating function, enable the temperature field by touching ℃ button.

» ℃ symbol flashes.

4. Set the desired temperature touching ∧/∨ keys.
5. Confirm the temperature setting by touching ℃ key.
6. Touch ▶ ‖ key to start grilling if temperature and operating function are appropriate. ▶ symbol appears on display.

» Your oven will readily start operating in the selected function and will increase the inner temperature to the set temperature. Each grades of the inner temperature symbol will be lit as inner temperature reaches to the set temperature. Additional active heaters and recommended tray position appear in the Function display.

7. You can finish grilling by touching ▶ ‖ button once again.

» The oven finishes grilling and ‖ symbol appears on display.

Switching off the grill

1. Touch the ⏻ button for approx. 2 seconds to close the oven.

Foods that are not suitable for grilling carry the risk of fire. Only grill food which is suitable for intensive grilling heat.
Do not place the food too far in the back of the grill. This is the hottest area and fatty food may catch fire.

Cooking times table for grilling

Grilling with electric grill

Food	Rack position	Recomended temperature (°C)**	Grilling time (approx.)
Fish	4...5	250/max	20...25 min. #
Sliced chicken	4...5	250/max	25...35 min.
Lamb chops	4...5	250/max	20...25 min.
Roast beef	4...5	250/max	25...30 min. #
Veal chops	4...5	250/max	25...30 min. #
Toast bread*	4	250/max	1...3 min.

depending on thickness
*Preheat for 5 minutes
**If the grill temperature of your product cannot be adjusted, the grill will work at the maximum temperature.

6 Maintenance and care

General information

Service life of the product will extend and the possibility of problems will decrease if the product is cleaned at regular intervals.

DANGER:
Disconnect the product from mains supply before starting maintenance and cleaning works.
There is the risk of electric shock!

DANGER:
Allow the product to cool down before you clean it.
Hot surfaces may cause burns!

- Clean the product thoroughly after each use. In this way it will be possible to remove cooking residues more easily, thus avoiding these from burning the next time the appliance is used.
- No special cleaning agents are required for cleaning the product. Use warm water with washing liquid, a soft cloth or sponge to clean the product and wipe it with a dry cloth.
- Always ensure any excess liquid is thoroughly wiped off after cleaning and any spillage is immediately wiped dry.
- Do not use cleaning agents that contain acid or chloride to clean the stainless or inox surfaces and the handle. Use a soft cloth with a liquid detergent (not abrasive) to wipe those parts clean, paying attention to sweep in one direction.

The surface might get damaged by some detergents or cleaning materials.
Do not use aggressive detergents, cleaning powders/creams or any sharp objects during cleaning.
Do not use harsh abrasive cleaners or sharp metal scrapers to clean the oven door glass since they can scratch the surface, which may result in shattering of the glass.

Do not use steam cleaners to clean the appliance as this may cause an electric shock.

Cleaning the control panel

Clean the control panel and knobs with a damp cloth and wipe them dry.

If your product is equipped with buttons/knobs do not remove the control buttons/knobs to clean the control panel.
Control panel may get damaged!

Cleaning the oven

To clean the side wall (Varies depending on the product model.)
(This feature is optional. It may not exist on your product.)

6. Remove the front section of the side rack by pulling it in the opposite direction of the side wall.
7. Remove the side rack completely by pulling it towards you.

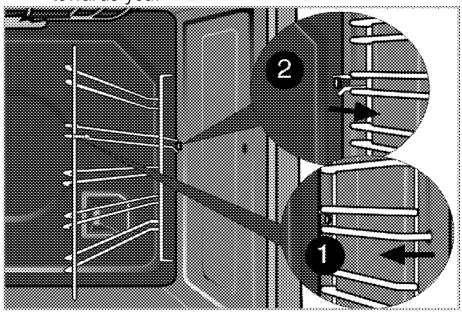

Catalytic walls
(This feature is optional. It may not exist on your product.)

The inner side walls (A) and/or the rear wall (B) of your product may be coated with catalytic enamel. Catalytic walls have a light matte colour and a porous surface. Catalytic walls of the oven should not be cleaned. Porous surfaces of the catalytic walls are automatically cleaned by absorbing and converting the spilled oil (steam and carbon dioxide).

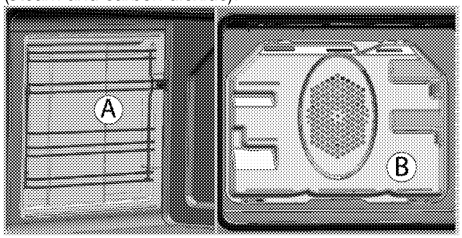

Easy Steam Cleaning
(This feature is optional. It may not exist on your product.)

It ensures easy cleaning because the dirt (having waited not for too long) is softened with the steam that

forms inside the oven and the water drops condensing on the inner surfaces of the oven.

1. Remove all accessories inside the oven.
2. Pour 500 ml of water into the oven tray and place the tray at the 2nd rack of the oven.

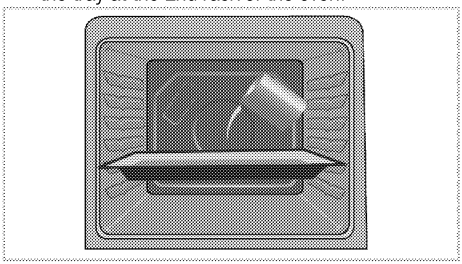

3. Select easy steam cleaning function. Cleaning duration will appear on the screen and it cannot be changed. You can set the end time for this cleaning function.
4. Open the door and wipe the inner surfaces of the oven with a damp sponge or cloth.
5. Use warm water with washing liquid, a soft cloth or sponge to clean the persistent dirt and wipe it with a dry cloth.

Pyrolytic self-cleaning

DANGER:
Hot surfaces cause burns!
Do not touch the product during self cleaning step and keep children away from it. Keep at least 30 minutes before removing the remnants.

The oven is equipped with pyrolytic self-cleaning. The oven is heated to approx. 430-480 °C and existing dirt is burned to ashes. A strong smoke development may arise. Provide for good ventilation. The pyrolysis should be used after approx. every 10th oven usage.

1. Remove all accessories from the oven. In models with side rack; do not forget to take out the side racks.

If your product is equipped with a pyro proof accessory (Resilient against self-cleaning at high temperatures), you do not need to remove these accessories from the oven.

2. Before the cleaning cycle, remove dirts from exterior surfaces and oven interior with a damph cloth.

Do not clean the door gasket.
Fiberglass gasket is highly sensitive and can get damaged easily.
In case of a damage on the oven door gasket, replace with the new one from the authorised service.

3. "Pyrolysis" Select the pyrolitic function (self-cleaning).

eco It is advised to use economic cleaning function if the oven does not have too much dirt.
If this function is used for heavy dirt, there won't be sufficient cleaning. For such cases, pyrolysis function should be applied after economic cleaning eco cycle finished.
The self-cleaning time appears in the display. This duration can not be adjusted.
The end of self cleaning cycle can be adjusted.

4. Oven door cannot be opened and lock symbol appears on the time display during self cleaning. It remains locked for a while after the pyrolysis function ends. Do not force the door lock with handle until lock symbol disappears.
5. After a clean cycle, remove soil deposits with vinegar water.

Clean oven door

To clean the oven door, use warm water with washing liquid, a soft cloth or sponge to clean the product and wipe it with a dry cloth.

Don't use any harsh abrasive cleaners or sharp metal scrapers for cleaning the oven door. They could scratch the surface and destroy the glass.

Removing the oven door

1. Open the front door (1).
2. Open the clips at the hinge housing (2) on the right and left hand sides of the front door by pressing them down as illustrated in the figure.

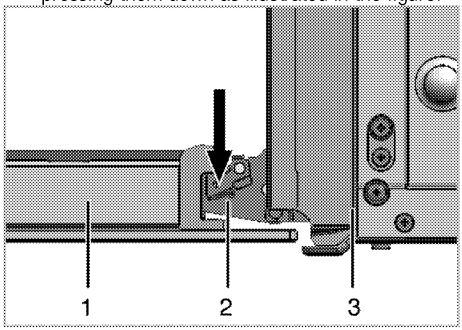

1 Front door
2 Hinge
3 Oven

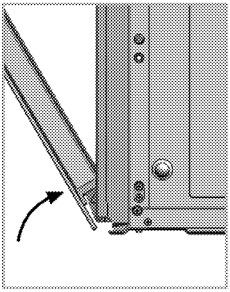

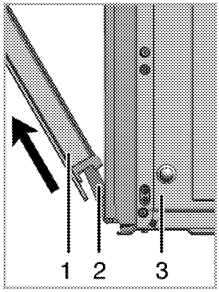

3. Move the front door to half-way.
4. Remove the front door by pulling it upwards to release it from the right and left hinges.

> Steps carried out during removing process should be performed in reverse order to install the door. Do not forget to close the clips at the hinge housing when reinstalling the door.

Removing the door inner glass

(This feature is optional. It may not exist on your product.)

The inner glass panel of the oven door can be removed for cleaning.

1. Open the oven door.

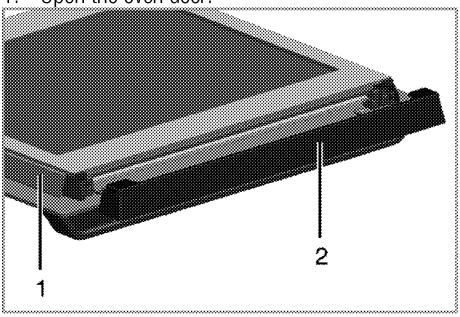

1 Frame
2 Plastic part

2. Pull towards yourself and remove the plastic part installed to upper section of the front door.

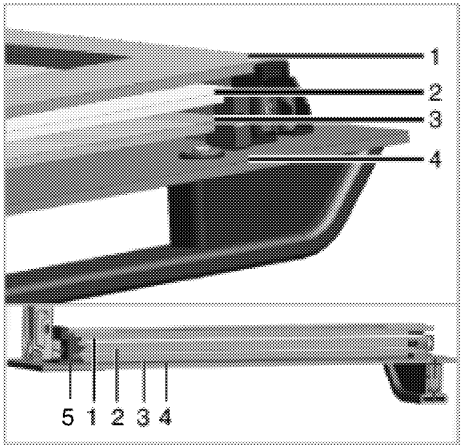

1 Innermost glass panel
2 Second inner glass panel
3 Third inner glass panel
4 Outer glass panel
5 Plastic glass panel slot-Lower

3. As illustrated in figure, raise the innermost glass panel slightly in direction **A** and pull it out in direction **B**.

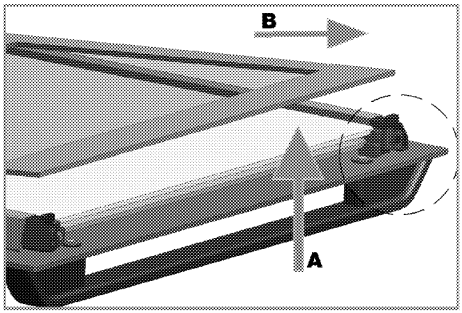

4. Repeat the same procedure to remove the second and third glass panels.

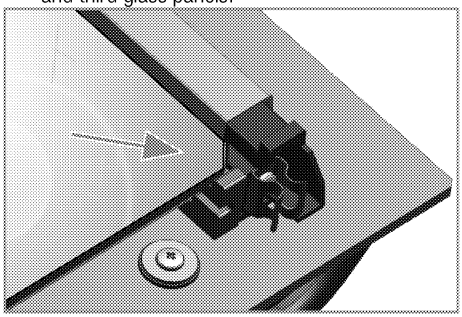

The first step to regroup the door is reinstalling second and third inner glass panels (2, 3).

As illustrated in figure, place the chamfered corner of the glass panel so that it will rest in the chamfered corner of the plastic slot.
Inserted as the second and third inner glass is important. Aluminum slatted glass 2 must be installed in the glass.
When installing the innermost glass panel (1), make sure that the printed side of the panel faces towards the second glass panel.
It is important to seat lower corners of all inner glass panels into the lower plastic slots (5).
Push the plastic part towards the frame until you hear a "click".

All glass panels must be reinstalled after cleaning.

Replacing the oven lamp

DANGER:
Before replacing the oven lamp, make sure that the product is disconnected from mains and cooled down in order to avoid the risk of an electrical shock.
Hot surfaces may cause burns!

The oven lamp is a special electric light bulb that can resist up to 300 °C. See *Technical specifications, page 11* for details. Oven lamps can be obtained from Authorised Service Agents or technician with licence.

Position of lamp might vary from the figure.

The lamp used in this appliance is not suitable for household room illumination. The intended purpose of this lamp is to assist the user to see foodstuffs.

The lamps used in this appliance have to withstand extreme physical conditions such as temperatures above 50 °C.

If your oven is equipped with a round lamp:

1. Disconnect the product from mains.
2. Turn the glass cover counter clockwise to remove it.

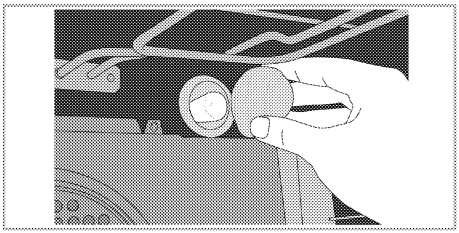

3. If your oven lamp is of type (A) shown in the figure below, remove it by rotating as shown and replace it. If it is of type (B), pull and remove it as shown in the figure and replace it.

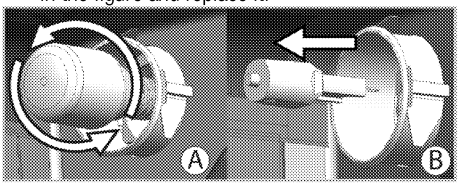

4. Install the glass cover.

7 Troubleshooting

Oven emits steam when it is in use.

- It is normal that steam escapes during operation. >>> *This is not a fault.*

Product emits metal noises while heating and cooling.

- When the metal parts are heated, they may expand and cause noise. >>> *This is not a fault.*

Product does not operate.

- The mains fuse is defective or has tripped. >>> *Check fuses in the fuse box. If necessary, replace or reset them.*
- Product is not plugged into the (grounded) socket. >>> *Check the plug connection.*

Oven light does not work.

- Oven lamp is defective. >>> *Replace oven lamp.*
- Power is cut. >>> *Check if there is power. Check the fuses in the fuse box. If necessary, replace or reset the fuses.*

Oven does not heat.

- Function and/or Temperature are not set. >>> *Set the function and the temperature with the Function and/or Temperature knob/key.*
- Power is cut. >>> *Check if there is power. Check the fuses in the fuse box. If necessary, replace or reset the fuses.*

Consult the Authorised Service Agent or technician with licence or the dealer where you have purchased the product if you can not remedy the trouble although you have implemented the instructions in this section. Never attempt to repair a defective product yourself.

8 Guarantee Details

BEKO UK AND IRELAND STANDARD MANUFACTURER GUARANTEE TERMS AND CONDITIONS

Your new Beko product is guaranteed against faulty materials, defective components or manufacturing defects.

The standard guarantee starts from the date of original purchase of the product, and lasts for a period of twelve (12) months unless Beko plc (the "Manufacturer") agrees to extend the guarantee for the product in writing.
If you have purchased an American style Fridge freezer, the standard guarantee starts from the date of original purchase of the product, and lasts for a period of twenty four (24) months unless Beko plc (the "Manufacturer") agrees to extend the guarantee for the product in writing.

If you have any questions about the guarantee on your product (including how long it is valid), please contact your retailer or our contact centre on 0333 207 9710 (UK and Northern Ireland) or 01 862 3411 (Republic of Ireland)

This guarantee does not in any way diminish or affect your statutory rights in connection with the product. This guarantee is in addition to your statutory rights as a consumer. If you have any questions about these rights, please contact the retailer from which you purchased the product. In certain circumstances, it is possible that your statutory rights may offer additional or higher levels of protection than those offered under the terms of this guarantee.

What is covered by this guarantee?

- Repairs to the product required as a result of faulty materials, defective components or manufacturing defects.
- Functional replacement parts to repair a product.
- The costs of a Beko Approved Engineer to carry out the repair.

What is not covered?

- Transit and delivery damage.
- Cabinet or appearance parts, including but not limited to control knobs, flaps and handles.
- Accessories and/or consumable items including but not limited to ice trays, scrapers, cutlery baskets, filters and light bulbs.
- Repairs necessary as a direct or indirect result of:
  - Accidental damage, misuse or abuse of a product.
  - An attempted repair of a product by anyone other than a Beko Approved Engineer (the "Engineer").
  - Installation or use of a product where such installation or use fails to meet the requirements contained in this guarantee or the User Instructions Booklet.
- Repairs to a product operated at any time on commercial or non-residential household premises (unless we have previously agreed to the installation environment).

This guarantee is limited to the cost of repairing the product. To the extent permitted by law, the Manufacturer does not accept and will not be held liable for any financial loss incurred in connection with the failure of any product to operate in accordance with the expected standards. Such financial loss includes but is not limited to loss arising from:

- Time taken off work.

- Damaged food, clothing or other items.
- Meals taken at restaurants or from takeaways.
- General compensation for inconvenience.

Important Notes

1. Your product is designed and built for domestic household use only.
2. The guarantee will automatically be void if the product is installed or is used in commercial or non-residential domestic household premises, unless we have previously agreed to the installation environment.
3. The product must be correctly installed, located and operated in accordance with the instructions contained in the User Instructions Booklet provided with your product.
4. Professional installation by a qualified Electrical Domestic Appliance Installer is recommended for all Washing Machines, Dishwashers and Electric Cookers (as incorrect installation may result in you having to pay for the cost of repairing the product).
5. Gas Cookers must be professionally installed by a Gas Safe (or Gas Networks Ireland for Republic of Ireland) registered gas installer.
6. This guarantee is given in respect of products purchased and used within the United Kingdom and the Republic of Ireland.
7. This guarantee is effective from the initial date of purchase of a new product from an authorised retailer and will be void if the product is resold.
8. This guarantee does not apply to graded sales (where the product is purchased as a “second”).
9. Possession of a copy of these terms and conditions does not necessarily mean that a product has the benefit of this guarantee. If you have any questions, please call our Call Centre on the number set out above.
10. The Manufacturer reserves the right to terminate the guarantee if its staff or representatives are subjected to physical or verbal abuse in the course of carrying out their duties.
11. Optional extras, where available (i.e. extendable feet) are supplied on a chargeable basis only.

Does Beko offer replacements?

This is a repair-only guarantee. On occasion, the Manufacturer may at its sole discretion, replace your product with a new product instead of carrying out a repair. Where a replacement is offered, this would normally be an identical model but when this is not possible, a model of similar specification will be provided. The Manufacturer will cover the costs and arrange for the delivery of the new product and for the return of the old product. Any costs related to disconnecting the faulty product and installing the replacement product will not be borne by the Manufacturer unless previously agreed to in writing. The original guarantee will continue to apply to the replacement product; the new product will not come with a new guarantee.

When will the repair take place?

Our Engineers work Monday to Friday 9.00am to 5.00pm. Appointments outside these hours may be possible at the sole discretion of the Manufacturer but cannot be guaranteed. Whilst our Engineers will endeavour to minimize inconvenience and to meet requests for specific timed appointments, this cannot be guaranteed. We will not be liable for delays or if it is unable to carry out a repair because a convenient appointment cannot be arranged.

Will there be any charge for the repairs?

It is your responsibility to provide evidence to the Engineer that your product is covered by this guarantee with a proof of purchase. The Manufacturer reserves the right to charge for the reasonable cost of any service call if:

- You cannot provide evidence that your product is covered by this guarantee.
- Where a service call has been made and the engineer finds that there is no fault with your product.
- That your product has not been installed or operated in accordance with the User Instructions Booklet.
- That the fault was caused by something other than faulty materials, defective components or manufacturing defects.
- For missed appointments.

Payment of these costs are due immediately upon the Engineer providing you with an invoice. The Manufacturer reserves the right to terminate the guarantee if you fail to pay the costs for the service call in a timely manner.

If you are a resident of the United Kingdom, this guarantee will be governed by English law and subject to the English Courts, save where you live in another part of the United Kingdom, in which case the law and courts of that location will apply.

If you are resident in the Republic of Ireland, this guarantee will be governed by Irish law and the Irish courts will have jurisdiction.

This guarantee is provided by Beko plc. Beko House, 1 Greenhill Crescent, Watford, Hertfordshire. WD18 8QU.

Beko plc is registered in England and Wales with company registration number 02415578.

BEKO UK AND IRELAND BUILT-IN APPLIANCES GUARANTEE TERMS AND CONDITIONS

If you have purchased a built-in or integrated appliance, and registered it within 90 days of purchase by completing the online registration form, then the standard 12 month guarantee will be extended to 24 months, under the same terms and conditions as detailed in our Standard Guarantee Terms and Conditions.

BEKO UK AND IRELAND PROSMART INVERTER MOTOR GUARANTEE TERMS AND CONDITIONS

This 10 year guarantee relates to Beko products that feature the ProSmart Inverter Motor.

The ProSmart Motor guarantee terms and conditions are in addition to our Standard guarantee terms and conditions detailed in the previous section.

In order to activate the 10 year guarantee you MUST register the appliance within 90 days of the original purchase date. You can register by first visiting Beko.co.uk/register and by following the online instructions.

Beko Free standing appliances come with a 12 month parts and labour guarantee as standard,

Beko Built-in appliances come with a 12 month parts and labour guarantee as standard. This is extended to 24 months, free of charge, upon registration of the appliance. When you register your appliance for additional guarantee, you will automatically activate the ProSmart Motor 10 year guarantee. You do not need to register twice. (beko.co.uk/guarantee-terms).

To make a claim against your Beko ProSmart Inverter Motor Guarantee (the "Guarantee"), all customer and product details must be registered with Beko plc using the procedure outlined below.

1. This extra 9 years (for free standing appliances) or 8 years (for built-in or integrated appliances) guarantee is only effective after the expiration of the standard manufacturer's guarantee.

2. It is only valid for the ProSmart Inverter motors of selected washing machines, washer-dryers, tumble dryers and dishwashers. It does not cover any labour charge or any other components of the product. In addition, it is only valid for one replacement of the ProSmart motor during the extra 9-year (for free standing appliances) or 8 year (for built-in appliances) guarantee period.

3. To activate your guarantee, you MUST register your appliance within 90 days of the original purchase date, by visiting beko.co.uk/register.

4. Customers will receive a unique reference code as proof of guarantee validation by email or post, which must be quoted at the time of a claim being made.

5. Any repair/replacement of the ProSmart Inverter motor must only be carried out by an authorised Beko Service Agent (the "Service Agent").

6. Labour for the repair/replacement of the ProSmart Inverter motor is not included in this guarantee and is chargeable directly by the Service Agent.

7. Any additional components fitted to the product at any time will not be covered by this guarantee and will be chargeable directly by the Service Agent.

8. The guarantee is not transferable and cannot be exchanged for cash.

9. There are no alternative or additional offers to this Guarantee.

10. The guarantee is exclusive of the manufacturer's standard guarantee.

11. The Terms and Conditions shown above are in addition to the standard terms and conditions of your product guarantee. Please read and refer to such Terms and Conditions when making any claim.

12. We may use the information you provide for marketing purposes and to analyse your purchasing preferences. We may keep your information for a reasonable period for these purposes in accordance with the applicable Data Protection Laws and General Data Protection Regulations (GDPR). You can opt into this service during the registration process. Further details are available at http://www.beko.co.uk/cookie-and-privacy.

13. These Terms and Conditions are governed by the laws of England and Wales; manufacturer: Beko plc, Beko House, 1 Greenhill Crescent, Watford WD18 8QU. Company Registration Number: 02415578.

HOW TO OBTAIN SERVICE FOR YOUR APPLIANCE

Please keep your purchase receipt or other proof of purchase details in a safe place; you will need to have this documentation available should the product require attention under guarantee.

Please take a few moments to complete the details below, as you will need this information when you call us, or to use our online services. When you call us you may be required to input your serial number into your telephone keypad. For help please visit beko.co.uk/support/model-finder

- The product model number is printed on the Operating Instruction Booklet / User guide
- The product model and serial number is printed on the Rating Label affixed to the appliance.
- The Retailer (Purchased from) and Date of purchase will be printed on your purchase receipt or other proof of purchase paperwork

Recording of these details alone will not count as proof of purchase. A valid proof of purchase is required for requesting service under guarantee.

Model number	Serial number	Purchased from	Date of purchase

For service under guarantee or for product advice please call our Contact centre

Before requesting service please check the troubleshooting guide in the Operating Instructions booklet, as a charge may be levied where no fault is found, and even though your product may still be under guarantee.

After arranging service the area around the product must be easily accessible to the Engineer, without the need for cabinets or furniture to be removed or moved.

It is your responsibility to ensure our Engineers have a clean and safe environment to carry out any repairs.

Please have your Model number and Serial number available when you call us, as you may be required to input your serial number into your telephone keypad during your call.

UK Mainland & Northern Ireland:

0333 207 9710

Landline or mobile calls to 0333 numbers cost no more than calls to geographic numbers 01 or 02, and are charged at the basic rate. Calls from landlines and mobiles are included in free call packages but please check with your telephone service provider for exact call charges.

Republic of Ireland:

01 862 3411

Service once the manufacturers guarantee has expired

If you have purchased an extended guarantee please refer to the instructions contained within the extended guarantee agreement document, otherwise please call us using the appropriate number above, where service can be obtained at a charge.

Should you experience any difficulty in obtaining service please call us on 0333 207 9710 or 01 862 3411

Contact us though our website

Send us a secure message through our online contact us form. Please visit our website, click Contact Us and choose a product support topic from the list of options. Complete the required details and click send message.

Product registrations

For UK registrations please visit beko.co.uk/register and for the Republic of Ireland visit beko.ie/register.