Oven

User manual

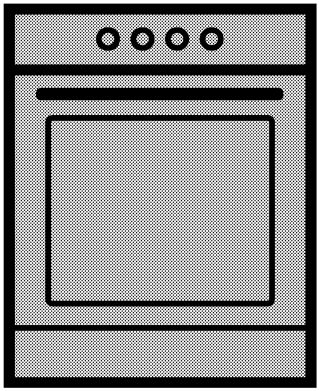

FSS66100GW

EN

285.3039.43/R.AB/11.01.2017/2-1

Please read this user manual first!

Dear Customer,
Thank you for purchasing this Beko product. We hope that you get the best results from your product which has been manufactured with high quality and state-of-the-art technology. Therefore, please read this entire user manual and all other accompanying documents carefully before using the product and keep it as a reference for future use. If you handover the product to someone else, give the user manual as well. Follow all warnings and information in the user manual.
Remember that this user manual is also applicable for several other models. Differences between models will be identified in the manual.

Explanation of symbols

Throughout this user manual the following symbols are used:

Important information or useful hints about usage.

Warning of hazardous situations with regard to life and property.

Warning of electric shock.

Warning of risk of fire.

Warning of hot surfaces.

Arçelik A.Ş.
Karaağaç caddesi No:2-6
34445 Sütlüce/Istanbul/TURKEY
Made in TURKEY

CE

This product was manufactured using the latest technology in environmentally friendly conditions.

1 Important instructions and warnings for safety and environment 4

General safety 4
Electrical safety 4
Product safety 5
Intended use 7
Safety for children....8
Disposing of the old product....8
Package information 8

2 General information 9

Overview....9
Package contents 10
Technical specifications 11

3 Installation 12

Before installation....12
Installation and connection 13
Future Transportation....14

4 Preparation 15

Tips for saving energy....15
Initial use....15
First cleaning of the appliance 15
Initial heating....15

5 How to use the hob 16

General information about cooking 16
Using the hobs.... 16

6 How to operate the oven 17

General information on baking, roasting and grilling17
How to operate the electric oven 17
Operating modes.... 18
Cooking times table.... 18
How to operate the grill.... 19
Cooking times table for grilling 19

7 Maintenance and care 20

General information.... 20
Cleaning the hob.... 20
Cleaning the control panel 20
Cleaning the oven 20
Removing the oven door 21
Removing the door inner glass 21
Replacing the oven lamp.... 22

8 Troubleshooting 23

1 Important instructions and warnings for safety and environment

This section contains safety instructions that will help protect from risk of personal injury or property damage. Failure to follow these instructions shall void any warranty.

General safety

- This appliance can be used by children aged from 8 years and above and persons with reduced physical, sensory or mental capabilities or lack of experience and knowledge if they have been given supervision or instruction concerning use of the appliance in a safe way and understand the hazards involved.
  Children shall not play with the appliance. Cleaning and user maintenance shall not be made by children without supervision.
- If the product is handed over to someone else for personal use or second-hand use purposes, the user manual, product labels and other relevant documents and parts should be also given.
- Never place the product on a carpet-covered floor. Otherwise, lack of airflow beneath the product will cause electrical parts to overheat. This will cause problems with your product.
- Installation and repair procedures must always be performed by Authorized Service Agents. The manufacturer shall not be held responsible for damages arising from procedures carried out by unauthorized persons which may also void the warranty. Before installation, read the instructions carefully.
- Do not operate the product if it is defective or has any visible damage.
- Ensure that the product function knobs are switched off after every use.

Electrical safety

- If the product has a failure, it should not be operated unless it is repaired by an Authorized Service Agent. There is the risk of electric shock!
- Only connect the product to a grounded outlet/line with the voltage and protection as specified in the “Technical specifications”. Have the grounding installation made by a qualified electrician while using the product with or without a transformer. Our company shall not be liable for any problems arising due to the product not

being earthed in accordance with the local regulations.
- Never wash the product by spreading or pouring water onto it! There is the risk of electric shock!
- The product must be disconnected during installation, maintenance, cleaning and repairing procedures.
- If the power connection cable for the product is damaged, it must be replaced by the manufacturer, its service agent or similarly qualified persons in order to avoid a hazard.
- The appliance must be installed so that it can be completely disconnected from the mains supply. The separation must be provided by a switch built into the fixed electrical installation, according to construction regulations.
- Rear surface of the oven gets hot when it is in use. Make sure that the electrical connection does not contact the rear surface; otherwise, connections can get damaged.
- Do not trap the mains cable between the oven door and frame and do not route it over hot surfaces. Otherwise, cable insulation may melt and cause fire as a result of short circuit.
- Any work on electrical equipment and systems should only be carried out by authorized and qualified persons.
- In case of any damage, switch off the product and disconnect it from the mains. To do this, turn off the fuse at home.
- Make sure that fuse rating is compatible with the product.

Product safety

- The appliance and its accessible parts become hot during use. Care should be taken to avoid touching heating elements. Children less than 8 years of age shall be kept away unless continuously supervised.
- Never use the product when your judgment or coordination is impaired by the use of alcohol and/or drugs.
- Be careful when using alcoholic drinks in your dishes. Alcohol evaporates at high temperatures and may cause fire since it can ignite when it comes into contact with hot surfaces.
- Food Poisoning Hazard: Do not let food sit in oven for more than 1 hour before or after cooking. Doing so can result in food poisoning or sickness.
- Do not place any flammable materials close to the product as

the sides may become hot during use.

- During use the appliance becomes hot. Care should be taken to avoid touching heating elements inside the oven.
- Keep all ventilation slots clear of obstructions.
- Do not heat closed tins and glass jars in the oven. The pressure that would build-up in the tin/jar may cause it to burst.
- Do not place baking trays, dishes or aluminium foil directly onto the bottom of the oven. The heat accumulation might damage the bottom of the oven.
- Do not use harsh abrasive cleaners or sharp metal scrapers to clean the oven door glass since they can scratch the surface, which may result in shattering of the glass.
- Do not use steam cleaners to clean the appliance as this may cause an electric shock.
- (Varies depending on the product model.)
  Placing the wire shelf and tray onto the wire racks properly
  It is important to place the wire shelf and/or tray onto the rack properly. Slide the wire shelf or tray between 2 rails and make sure that it is balanced before placing food on it (Please see the following figure).

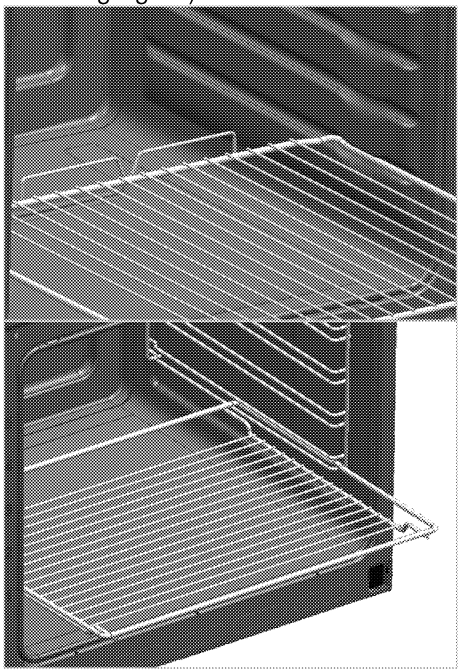

- Do not use the product if the front door glass removed or cracked.
- Do not use the oven handle to hang towels for drying. Do not hang up towel, gloves, or similar textile products when the grill function is at open door.
- Always use heat resistant oven gloves when putting in or removing dishes into/from the hot oven.
- Place the baking paper into the cooking pot or on to the oven accessory (tray, wire grill etc) together with the food and then insert all into the preheated oven. Remove the excess parts of the

baking paper overflowing from the accessory or the pot in order to prevent the risk of touching the oven's heating elements. Never use the baking paper in an operating temperature higher than the indicated value for the baking paper. Do not place the baking paper directly on the base of the oven.

- Ensure that the appliance is disconnected from mains before replacing the lamp to avoid the possibility of electric shock.
- Do not close the top cover before the hotplates or burners cool down.
  Wipe the top cover dry before opening it in order to avoid water leakage to the rear and inner sections of the oven.
- Unattended cooking on a hob with fat or oil can be dangerous and may result in fire. NEVER try to extinguish a fire with water, but switch off the appliance and then cover flame e.g. with a lid or a fire blanket.
- Danger of fire: Do not store items on the cooking surfaces.
- The appliance is not intended to be operated by means of an external timer or separate remote-control system.
- Use only hob guards designed by the manufacturer of the cooking appliance or indicated by the manufacturer of the appliance in the instructions for use as suitable or hob guards incorporated in the appliance. The use of inappropriate guards can cause accidents.

Prevention against possible fire risk!

- Ensure all electrical connections are secure and tight to prevent risk of arcing.
- Do not use damaged cables or extension cables.
- Ensure liquid or moisture is not accessible to the electrical connection point.

Intended use

- This product is designed for domestic use. Commercial use will void the guarantee.
- This appliance is for cooking purposes only. It must not be used for other purposes, for example room heating.
- This product should not be used for warming the plates under the grill, drying towels, dish cloths etc. by hanging them on the oven door handles. This product should also not be used for room heating purposes.
- The manufacturer shall not be liable for any damage caused by improper use or handling errors.

- The oven can be used for defrosting, baking, roasting and grilling food.

Safety for children

- Accessible parts may become hot during use. Young children should be kept away.
- The packaging materials will be dangerous for children. Keep the packaging materials away from children. Please dispose of all parts of the packaging according to environmental standards.
- Electrical products are dangerous to children. Keep children away from the product when it is operating and do not allow them to play with the product.
- Do not place any items above the appliance that children may reach for.
- When the door is open, do not load any heavy object on it and do not allow children to sit on it. It may overturn or door hinges may get damaged.

Disposing of the old product

Compliance with the WEEE Directive and Disposing of the Waste Product:

This product complies with EU WEEE Directive (2012/19/EU). This product bears a classification symbol for waste electrical and electronic equipment (WEEE).
This product has been manufactured with high quality parts and materials which can be reused and are suitable for recycling. Do not dispose of the waste product with normal domestic and other wastes at the end of its service life. Take it to the collection center for the recycling of electrical and electronic equipment. Please consult your local authorities to learn about these collection centers.

Compliance with RoHS Directive:
The product you have purchased complies with EU RoHS Directive (2011/65/EU). It does not contain harmful and prohibited materials specified in the Directive.

Package information

- Packaging materials of the product are manufactured from recyclable materials in accordance with our National Environment Regulations. Do not dispose of the packaging materials together with the domestic or other wastes. Take them to the packaging material collection points designated by the local authorities.

2 General information

Overview

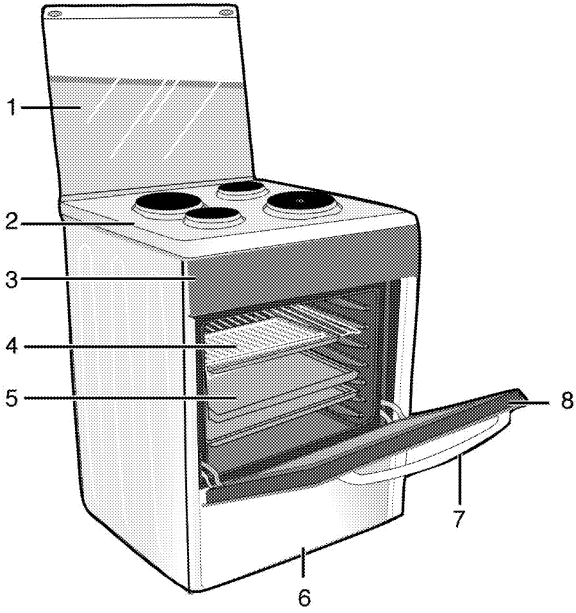

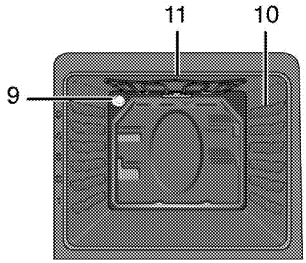

1	Top lid	7	Handle
2	Burner plate	8	Front door
3	Control panel	9	Lamp
4	Wire shelf	10	Shelf positions
5	Tray	11	Grill heating element
6	Lower part		

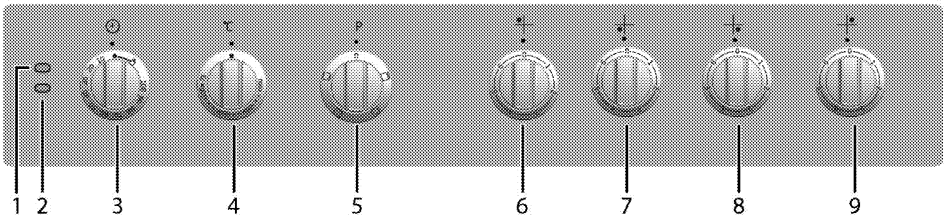

1	Warning lamp	6	Hotplate Rear left
2	Thermostat lamp	7	Hotplate Front left
3	Mechanical timer	8	Hotplate Front right
4	Thermostat knob	9	Hotplate Rear right
5	Function knob		

Package contents

Accessories supplied can vary depending on the product model. Not every accessory described in the user manual may exist on your product.

1. **User manual**
2. **Oven tray**
   Used for pastries, frozen foods and big roasts.

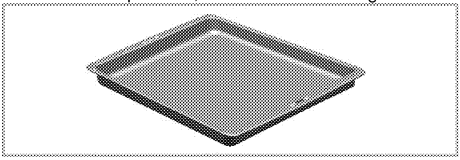

3. **Wire Shelf**
   Used for roasting and for placing the food to be baked, roasted or cooked in casserole dishes to the desired rack.

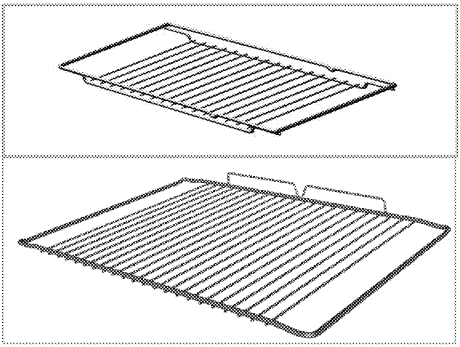

4. **Placing the wire shelf and tray onto the telescopic racks properly (This feature is optional. It may not exist on your product.)**
   Telescopic racks allow you to install and remove the trays and wire shelf easily.
   When using the tray and wire shelf with telescopic racks, make sure that the pins at the rear section of the telescopic rack stands against the edges of the wire shelf and tray.

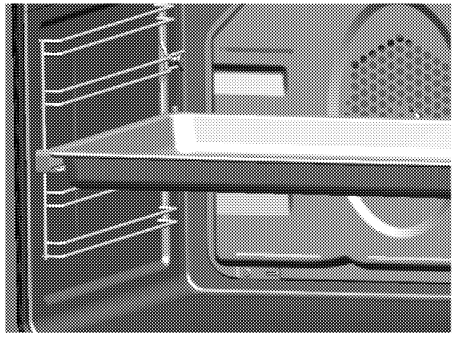

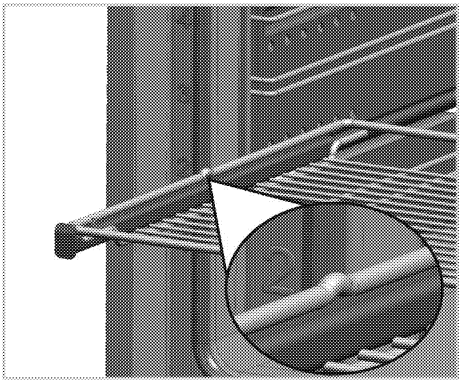

Technical specifications

GENERAL	
External dimensions (height / width / depth)	850 mm/600 mm/600 mm
Voltage / frequency	220-240 V ~ 50/60 Hz
Total power consumption	8.3 kW
Fuse	min. 25 A
Cable type / section	min.H05VV-FG 3 x 2,5 mm^2
HOB	
Burners	
Rear left	**Hotplate**
Dimension	145 mm
Power	1000 W
Front left	**Hotplate**
Dimension	180 mm
Power	2000 W
Front right	**Hotplate**
Dimension	145 mm
Power	1000 W
Rear right	**Hotplate**
Dimension	180 mm
Power	2000 W
OVEN/GRILL	
Main oven	**Conventional oven**
Inner lamp	15–25 W
Grill power consumption	2.2 kW

Basics: Information on the energy label of electrical ovens is given in accordance with the EN 60350-1 / IEC 60350-1 standard. Those values are determined under standard load with bottom-top heater or fan assisted heating (if any) functions.
Energy efficiency class is determined in accordance with the following prioritization depending on whether the relevant functions exist on the product or not. 1-Cooking with eco-fan, 2- Turbo slow cooking, 3- Turbo cooking, 4- Fan assisted bottom/top heating, 5-Top and bottom heating.

Technical specifications may be changed without prior notice to improve the quality of the product.

Figures in this manual are schematic and may not exactly match your product.

Values stated on the product labels or in the documentation accompanying it are obtained in laboratory conditions in accordance with relevant standards. Depending on operational and environmental conditions of the product, these values may vary.

3 Installation

Product must be installed by a qualified person in accordance with the regulations in force. The manufacturer shall not be held responsible for damages arising from procedures carried out by unauthorized persons which may also void the warranty.

Preparation of location and electrical installation for the product is under customer's responsibility.

DANGER:
The product must be installed in accordance with all local electrical regulations.

DANGER:
Prior to installation, visually check if the product has any defects on it. If so, do not have it installed.
Damaged products cause risks for your safety.

Before installation

To ensure that critical air gaps are maintained under the appliance, we recommend that this appliance is mounted on a solid base and that the feet do not sink into any carpet or soft flooring.
The kitchen floor must be able to carry the weight of the appliance plus the additional weight of cookware and bakeware and food.
If the range is placed on a base, measures have to be taken to prevent the appliance slipping from the base.
The appliances must not be installed behind a decorative door in order to avoid overheating.

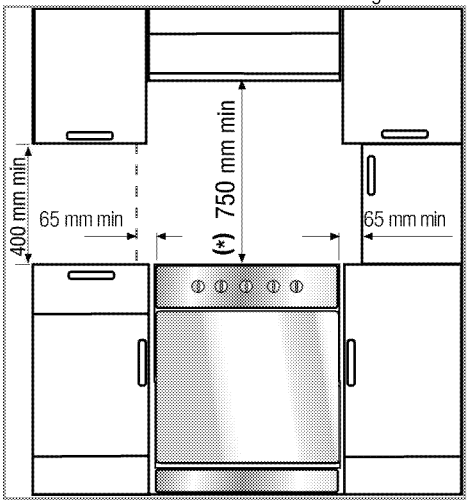

- It can be used with cabinets on either side but in order to have a minimum distance of 400mm above hotplate level allow a side clearance of 65mm between the appliance and any wall, partition or tall cupboard.
- It can also be used in a free standing position. Allow a minimum distance of 750 mm above the hob surface.
- (*) If a cooker hood is to be installed above the cooker, refer to cooker hood manufacturer' instructions regarding installation height (min 650 mm).
- The appliance corresponds to device class 1, i.e. it may be placed with the rear and **one** side to kitchen walls, kitchen furniture or equipment of any size. The kitchen furniture or equipment on the **other** side may only be of the same size or smaller.
- Any kitchen furniture next to the appliance must be heat-resistant (100 °C min.).

Safety chain

The appliance must be secured against overbalancing by using the supplied two safety chains on your oven. Fasten hook (1)by using a proper peg to the kitchen wall (6) and connect safety chain (3) to the hook via the locking mechanism (2).

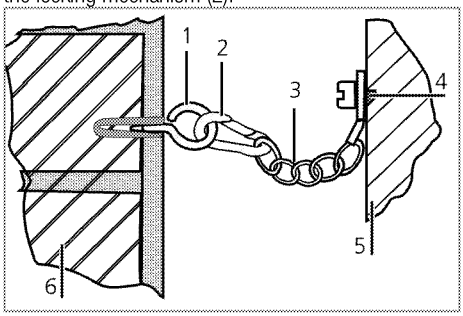

1 Stability hook
2 Locking mechanism
3 Safety chain (supplied and mounted to oven)
4 Firmliy fix chain to cooker rear
5 Rear of cooker
6 Kitchen wall

Stability chain to be as short as practicable to avoid oven tilting forward and diagonal to avoid oven side tilting.

Cooker stability chain for cookers not designed with bracket engagement slot.

Installation and connection

Product can only be installed and connected in accordance with the statutory installation rules.

Do not install the product next to refrigerators or freezers. The heat emitted by the product will increase the energy consumption of cooling appliances.

- Carry the product with at least two persons.
- Product must be placed directly on the floor. It must not be placed onto a base or a pedestal.

Do not use the door and/or handle to carry or move the product. The door, handle or hinges get damaged.

Electrical connection

Connect the product to a grounded outlet/line protected by a fuse of suitable capacity as stated in the "Technical specifications" table. Have the grounding installation made by a qualified electrician while using the product with or without a transformer. Our company shall not be liable for any damages that will arise due to using the product without a grounding installation in accordance with the local regulations.

DANGER:
The product must be connected to the mains supply only by an authorised and qualified person. The product's warranty period starts only after correct installation.
Manufacturer shall not be held responsible for damages arising from procedures carried out by unauthorised persons.

DANGER:
The power cable must not be clamped, bent or trapped or come into contact with hot parts of the product.
A damaged power cable must be replaced by a qualified electrician. Otherwise, there is risk of electric shock, short circuit or fire!

The mains supply data must correspond to the data specified on the type label of the product. The rating plate is either seen when the door or the lower cover is opened or it is located at the rear wall of the unit depending on the unit type.
Power cable of your product must comply with the values in "Technical specifications" table.

DANGER:
Before starting any work on the electrical installation, disconnect the product from the mains supply.
There is the risk of electric shock!

Connecting the power cable

1. If it is not possible to disconnect all poles in the supply power, a disconnection unit with at least 3 mm contact clearance (fuses, line safety switches, contactors) must be connected and all the poles of this disconnection unit must be adjacent to (not above) the product in accordance with IEE directives. Failure to obey this instruction may cause operational problems and invalidate the product warranty.

Additional protection by a residual current circuit breaker is recommended.

If a cable is supplied with the product:

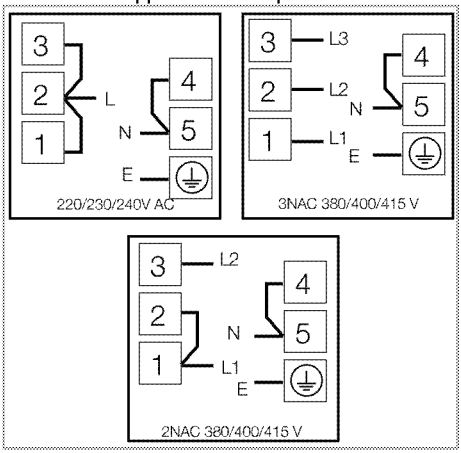

2. **For single-phase connection,** connect as identified below:

- Brown cable = L (Phase)
- Blue cable = N (Neutral)
- Green/yellow cable = (E) ⏚ (Ground)
- Push the product towards the kitchen wall.
- **Adjusting the feet of oven**
  Vibrations during use may cause cooking vessels to move. This dangerous situation can be avoided if the product is level and balanced.
  For your own safety please ensure the product is level by adjusting the four feet at the bottom by turning left or right and align level with the work top.

For products with cooling fan (It may not exist on your product.)

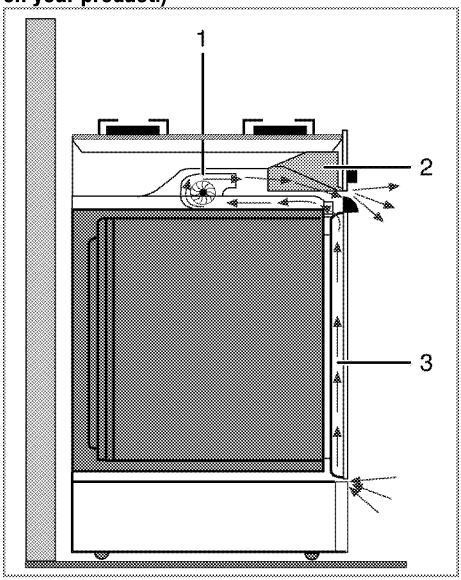

1 Cooling fan
2 Control panel
3 Door

The cooling fan cools both the control panel and the front of the appliance.

Cooling fan continues to run for up to 20-30 minutes (approx.) even after the oven is turned off.

Final check

1. Reconnect the product to the mains.
2. Check electrical functions.

Future Transportation

- Keep the product's original carton and transport the product in it. Follow the instructions on the carton. If you do not have the original carton, pack the product in bubble wrap or thick cardboard and tape it securely.
- To prevent the wire grill and tray inside the oven from damaging the oven door, place a strip of cardboard onto the inside of the oven door that lines up with the position of the trays. Tape the oven door to the side walls.
- Do not use the door or handle to lift or move the product.

Do not place any objects onto the product and move it in upright position.

Check the general appearance of your product for any damages that might have occurred during transportation.

4 Preparation

Tips for saving energy

The following information will help you to use your appliance in an ecological way, and to save energy:

- Use dark coloured or enamel coated cookware in the oven since the heat transmission will be better.
- While cooking your dishes, perform a preheating operation if it is advised in the user manual or cooking instructions.
- Do not open the door of the oven frequently during cooking.
- Try to cook more than one dish in the oven at the same time whenever possible. You can cook by placing two cooking vessels onto the wire shelf.
- Cook more than one dish one after another. The oven will already be hot.
- You can save energy by switching off your oven a few minutes before the end of the cooking time. Do not open the oven door.
- Defrost frozen dishes before cooking them.
- Use pots/pans with cover for cooking. If there is no cover, energy consumption may increase 4 times.
- Select the burner which is suitable for the bottom size of the pot to be used. Always select the correct pot size for your dishes. Larger pots require more energy.
- Pay attention to use flat bottom pots when cooking with electric hobs.
  Pots with thick bottom will provide a better heat conduction. You can obtain energy savings up to 1/3.
- Vessels and pots must be compatible with the hotplates. Bottom of the vessels or pots must not be smaller than the hotplate.
- Keep the hotplates and bottom of the pots clean. Dirt will decrease the heat conduction between the hotplate and bottom of the pot.
- For long cookings, turn off the hotplate 5 or 10 minutes before the end of cooking time. You can obtain energy savings up to 20% by using the residual heat.

Initial use

First cleaning of the appliance

The surface might get damaged by some detergents or cleaning materials.
Do not use aggressive detergents, cleaning powders/creams or any sharp objects during cleaning.
Do not use harsh abrasive cleaners or sharp metal scrapers to clean the oven door glass since they can scratch the surface, which may result in shattering of the glass.

1. Remove all packaging materials.
2. Wipe the surfaces of the appliance with a damp cloth or sponge and dry with a cloth.

Initial heating

Heat up the product for about 30 minutes and then switch it off. Thus, any production residues or layers will be burnt off and removed.

WARNING
Hot surfaces cause burns!
Product may be hot when it is in use. Never touch the hot burners, inner sections of the oven, heaters and etc. Keep children away. Always use heat resistant oven gloves when putting in or removing dishes into/from the hot oven.

Electric oven

1. Take all baking trays and the wire grill out of the oven.
2. Close the oven door.
3. Select Static position.
4. Select the highest oven power; See *How to operate the electric oven, page 17.*
5. Operate the oven for about 30 minutes.
6. Turn off your oven; See *How to operate the electric oven, page 17*

Grill oven

1. Take all baking trays and the wire grill out of the oven.
2. Close the oven door.
3. Select the highest grill power; see *How to operate the grill, page 19.*
4. Operate the grill about 30 minutes.
5. Turn off your grill; see *How to operate the grill, page 19*

Hot plate

1. Any production residues or conservation layers must be burnt before the first use. Operate the hotplate at middle temperature level for 8 minutes without any vessel on it. No pots or containers should be placed onto the hotplate during this procedure.

Smoke and smell may emit for a couple of hours during the initial operation. This is quite normal. Ensure that the room is well ventilated to remove the smoke and smell. Avoid directly inhaling the smoke and the smell that emits.

5 How to use the hob

General information about cooking

Never fill the pan with oil more than one third of it. Do not leave the hob unattended when heating oil. Overheated oils bring risk of fire. **Never attempt to extinguish a possible fire with water!** When oil catches fire, cover it with a fire blanket or damp cloth. Turn off the hob if it is safe to do so and call the fire department.

- Before frying foods, always dry them well and gently place into the hot oil. Ensure complete thawing of frozen foods before frying.
- Do not cover the vessel you use when heating oil.
- Place the pans and saucepans in a manner so that their handles are not over the hob to prevent heating of the handles. Do not place unbalanced and easily tilting vessels on the hob.
- Do not place empty vessels and saucepans on cooking zones that are switched on. They might get damaged.
- Operating a cooking zone without a vessel or saucepan on it will cause damage to the product. Turn off the cooking zones after the cooking is complete.
- As the surface of the product can be hot, do not put plastic and aluminum vessels on it. Such vessels should not be used to keep foods either.
- Use flat bottomed saucepans or vessels only.
- Put appropriate amount of food in saucepans and pans. Thus, you will not have to make any unnecessary cleaning by preventing the dishes from overflowing.
  Do not put covers of saucepans or pans on cooking zones.
  Place the saucepans in a manner so that they are centered on the cooking zone. When you want to move the saucepan onto another cooking zone, lift and place it onto the cooking zone you want instead of sliding it.

Using the hobs

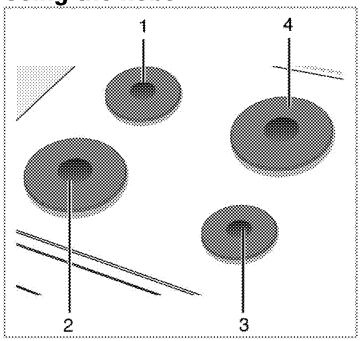

1 Hotplate 14-16 cm
2 Hotplate 18-20 cm
3 Hotplate 14-16 cm
4 Hotplate 18-20 cm is list of advised diameter of pots to be used on related burners.

Using hotplates

Hob knobs can be turned in both directions in a way that will provide temperature control in steps.

If the hob is equipped with hotplates featuring Booster function, relevant hotplate will be marked with a red dot.

Overheating protection

Hotplates that have a power above 1000 W are equipped with an overheating protection. Overheating protection decreases the power of the hotplate in following cases:

- There is no vessel or saucepan on the hotplate.
- There is an empty vessel or saucepan on the hotplate.
- The bottom of the vessel or saucepan is not flat.

Turning on the hotplates

Use hotplate knobs to operate the hotplates. Move the hotplate knobs to the relevant level in order to obtain the desired cooking level.

Cooking level	1	2 — 3	4 — 6
	warming	stewing, simmering	cooking, roasting, boiling

Turning off the hotplates

Turn the hotplate knob to OFF (upper) position.

6 How to operate the oven

General information on baking, roasting and grilling

WARNING
Hot surfaces cause burns!
Product may be hot when it is in use. Never touch the hot burners, inner sections of the oven, heaters and etc. Keep children away. Always use heat resistant oven gloves when putting in or removing dishes into/from the hot oven.

DANGER:
Be careful when opening the oven door as steam may escape.
Exiting steam can scald your hands, face and/or eyes.

Tips for baking

- Use non-sticky coated appropriate metal plates or aluminum vessels or heat-resistant silicone moulds.
- Make best use of the space on the rack.
- Place the baking mould in the middle of the shelf.
- Select the correct rack position before turning the oven or grill on. Do not change the rack position when the oven is hot.
- Keep the oven door closed.

Tips for roasting

- Treating whole chicken, turkey and large piece of meat with dressings such as lemon juice and black pepper before cooking will increase the cooking performance.
- It takes about 15 to 30 minutes longer to roast meat with bones when compared to roasting the same size of meat without bones.
- Each centimeter of meat thickness requires approximately 4 to 5 minutes of cooking time.
- Let meat rest in the oven for about 10 minutes after the cooking time is over. The juice is better distributed all over the roast and does not run out when the meat is cut.
- Fish should be placed on the middle or lower rack in a heat-resistant plate.

Tips for grilling

When meat, fish and poultry are grilled, they quickly get brown, have a nice crust and do not get dry. Flat pieces, meat skewers and sausages are particularly suited for grilling as are vegetables with high water content such as tomatoes and onions.

- Distribute the pieces to be grilled on the wire shelf or in the baking tray with wire shelf in such a way that the space covered does not exceed the size of the heater.
- Slide the wire shelf or baking tray with grill into the desired level in the oven. If you are grilling on the wire shelf, slide the baking tray to the lower rack to collect fats. Add some water in the tray for easy cleaning.

Foods that are not suitable for grilling carry the risk of fire. Only grill food which is suitable for intensive grilling heat.
Do not place the food too far in the back of the grill. This is the hottest area and fatty food may catch fire.

How to operate the electric oven

Select temperature and operating mode

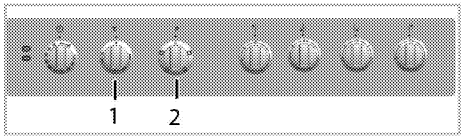

1 Thermostat knob
2 Function knob

1. Set the Function knob to the desired operating mode.
2. Set the Temperature knob to the desired temperature.

» Oven heats up to the adjusted temperature and maintains it. During heating, temperature lamp stays on.

Switching off the electric oven

Turn the function knob and temperature knob to off (upper) position.

Rack positions (For models with wire shelf)

It is important to place the wire shelf onto the side rack correctly. Wire shelf must be inserted between the side racks as illustrated in the figure.
Do not let the wire shelf stand against the rear wall of the oven. Slide your wire shelf to the front section of the rack and settle it with the help of the door in order to obtain a good grill performance.

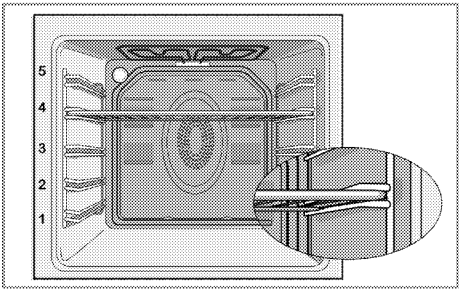

Operating modes

The order of operating modes shown here may be different from the arrangement on your product.

Top and bottom heating

Top and bottom heating are in operation. Food is heated simultaneously from the top and bottom. For example, it is suitable for cakes, pastries, or cakes and casseroles in baking moulds. Cook with one tray only.

Bottom heating

Only bottom heating is in operation. It is suitable for pizza and for subsequent browning of food from the bottom.

This function must be used for easy steam cleaning as well.

Grill

Small grill at the ceiling of the oven is in operation. Suitable for grilling.

- Put small or medium-sized portions in correct shelf position under the grill heater for grilling.
- Set the temperature to maximum level.
- Turn the food after half of the grilling time.

Full grill

Large grill at the ceiling of the oven is in operation. It is suitable for grilling large amount of meat.

- Put big or medium-sized portions in correct rack position under the grill heater for grilling.
- Set the temperature to maximum level.
- Turn the food after half of the grilling time.

Cooking times table

The timings in this chart are meant as a guide. Timings may vary due to temperature of food, thickness, type and your own preference of cooking.

Baking and roasting

1st rack of the oven is the **bottom** rack.

Dish	Cooking level number		Rack position	Temperature (°C)	Cooking time (approx. in min.)
**Cakes in tray	One level		3	175	25 ... 30
**Cakes in mould	One level		2	175	40 ... 50
**Cakes in cooking paper	One level		3	175	25 ... 30
**Sponge cake	One level		3	200	5 ... 10
**Cookie	One level		3	175	25 ... 30
**Dough pastry	One level		2	200	30 ... 40
**Rich pastry	One level		2	200	25 ... 35
**Leaven	One level		2	200	35 ... 45
**Lasagna	One level		2 - 3	200	30 ... 40
**Pizza	One level		2	200 ... 220	15 ... 20
Beef steak (whole) / Roast	One level		2	25 min. 250/max, then 180 ... 190	100 ... 120
Leg of Lamb (casserole)	One level		2	25 min. 220 then 190	70 ... 90
Roasted chicken	One level		2	15 min. 250/max, then 190	55 ... 65
Turkey (5.5 kg)	One level		1	25 min. 250/max, then 190	150 ... 210

Fish	One level		3	200	20 ... 30

(**) In a cooking that requires preheating, preheat at the beginning of cooking until the thermostat lamp turns off.

Tips for baking cake

- If the cake is too dry, increase the temperature by 10°C and decrease the cooking time.
- If the cake is wet, use less liquid or lower the temperature by 10°C.
- If the cake is too dark on top, place it on a lower rack, lower the temperature and increase the cooking time.
- If cooked well on the inside but sticky on the outside use less liquid, lower the temperature and increase the cooking time.

Tips for baking pastry

- If the pastry is too dry, increase the temperature by 10°C and decrease the cooking time. Dampen the layers of dough with a sauce composed of milk, oil, egg and yoghurt.
- If the pastry takes too long to bake, pay care that the thickness of the pastry you have prepared does not exceed the depth of the tray.
- If the upper side of the pastry gets browned, but the lower part is not cooked, make sure that the amount of sauce you have used for the pastry is not too much at the bottom of the pastry. Try to scatter the sauce equally between the dough layers and on the top of pastry for an even browning.

Cook the pastry in accordance with the mode and temperature given in the cooking table. If the bottom part is still not browned enough, place it on one lower rack next time.

Tips for cooking vegetables

- If the vegetable dish runs out of juice and gets too dry, cook it in a pan with a lid instead of a tray. Closed vessels will preserve the juice of the dish.
- If a vegetable dish does not get cooked, boil the vegetables beforehand or prepare them like canned food and put in the oven.

How to operate the grill

WARNING
Close oven door during grilling.
Hot surfaces may cause burns!

Switching on the grill

1. Turn the Function knob to the desired grill symbol.
2. Then, select the desired grilling temperature.
3. If required, perform a preheating of about 5 minutes.

» Temperature light turns on.

Switching off the grill

1. Turn the Function knob to Off (top) position.

Foods that are not suitable for grilling carry the risk of fire. Only grill food which is suitable for intensive grilling heat.
Do not place the food too far in the back of the grill. This is the hottest area and fatty food may catch fire.

Cooking times table for grilling

Grilling with electric grill

Food	Insertion level	Grilling time (approx.)
Fish	4...5	20...25 min. #
Sliced chicken	4...5	25...35 min.
Lamb chops	4...5	20...25 min.
Roast beef	4...5	25...30 min. #
Veal chops	4...5	25...30 min. #
Toast bread	4	1...2 min.

depending on thickness

7 Maintenance and care

General information

Service life of the product will extend and the possibility of problems will decrease if the product is cleaned at regular intervals.

DANGER:
Disconnect the product from mains supply before starting maintenance and cleaning works.
There is the risk of electric shock!

DANGER:
Allow the product to cool down before you clean it.
Hot surfaces may cause burns!

- Clean the product thoroughly after each use. In this way it will be possible to remove cooking residues more easily, thus avoiding these from burning the next time the appliance is used.
- No special cleaning agents are required for cleaning the product. Use warm water with washing liquid, a soft cloth or sponge to clean the product and wipe it with a dry cloth.
- Always ensure any excess liquid is thoroughly wiped off after cleaning and any spillage is immediately wiped dry.
- Do not use cleaning agents that contain acid or chloride to clean the stainless or inox surfaces and the handle. Use a soft cloth with a liquid detergent (not abrasive) to wipe those parts clean, paying attention to sweep in one direction.
- **(This feature is optional. It may not exist on your product.)**
  Do not use solid metal scrapers or abrasive cleaning materials to clean the glass cover. Glass surface can get damaged.

The surface might get damaged by some detergents or cleaning materials.
Do not use aggressive detergents, cleaning powders/creams or any sharp objects during cleaning.
Do not use harsh abrasive cleaners or sharp metal scrapers to clean the oven door glass since they can scratch the surface, which may result in shattering of the glass.

Do not use steam cleaners to clean the appliance as this may cause an electric shock.

Cleaning the hob

Electric hobs

1. Turn off the hotplates and wait until they cool down.
2. If necessary, clean the plates with a cleaning agent (you can obtain cleaners/softeners from specialty stores).
3. Warm only for a few minutes after cleaning in order to have their top section dried.
4. Apply a thin layer of machine oil onto the top surface of the hob regularly in order to protect it.

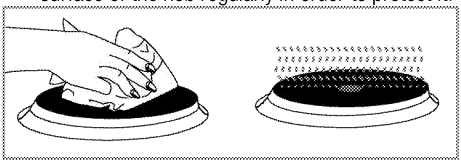

Cleaning the control panel

Clean the control panel and knobs with a damp cloth and wipe them dry.

Do not remove the control buttons/knobs to clean the control panel.
Control panel may get damaged!

Cleaning the oven

To clean the side wall

(This feature is optional. It may not exist on your product.)

1. Remove the front section of the side rack by pulling it in the opposite direction of the side wall.
2. Remove the side rack completely by pulling it towards you.

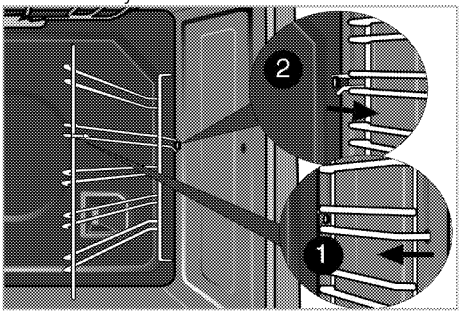

Catalytic walls

(This feature is optional. It may not exist on your product.)

The inner side walls (A) and/or the rear wall (B) of your product may be coated with catalytic enamel. Catalytic walls have a light matte colour and a porous surface.

Catalytic walls of the oven should not be cleaned. Porous surfaces of the catalytic walls are automatically cleaned by absorbing and converting the spilled oil (steam and carbon dioxide).

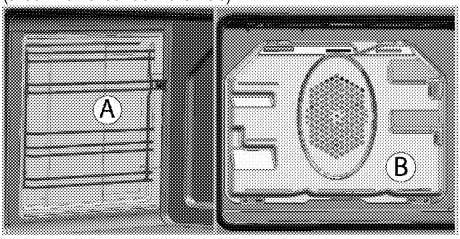

Easy Steam Cleaning

It ensures easy cleaning because the dirt (having waited not for too long) is softened with the steam that forms inside the oven and the water drops condensing on the inner surfaces of the oven.

1. Remove all accessories inside the oven.
2. Place a metal container to the bottom of the oven. Add 400 ml water into the container.

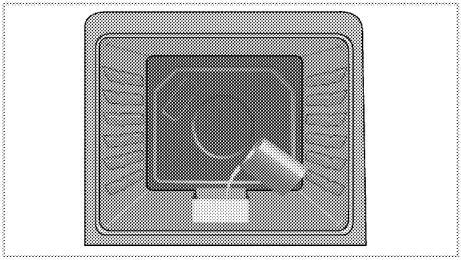

3. Set the oven to easy steam cleaning mode and run at 200°C for 25 minutes.
4. Open the door and wipe the inner surfaces of the oven with a damp sponge or cloth.
5. Use warm water with washing liquid, a soft cloth or sponge to clean the persistent dirt and wipe it with a dry cloth.

Clean oven door

To clean the oven door, use warm water with washing liquid, a soft cloth or sponge to clean the product and wipe it with a dry cloth.

Don't use any harsh abrasive cleaners or sharp metal scrapers for cleaning the oven door. They could scratch the surface and destroy the glass.

Removing the oven door

1. Open the front door (1).
2. Open the clips at the hinge housing (2) on the right and left hand sides of the front door by pressing them down as illustrated in the figure.

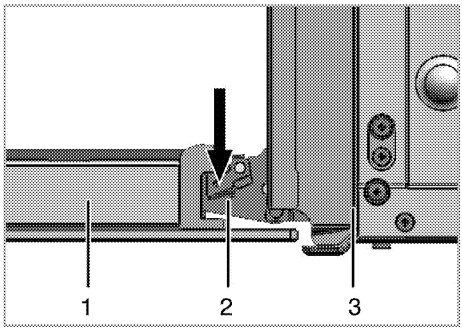

1 Front door
2 Hinge
3 Oven

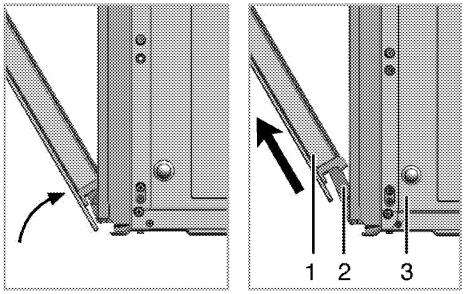

3. Move the front door to half-way.
4. Remove the front door by pulling it upwards to release it from the right and left hinges.

Steps carried out during removing process should be performed in reverse order to install the door. Do not forget to close the clips at the hinge housing when reinstalling the door.

Removing the door inner glass

(This feature is optional. It may not exist on your product.)

The inner glass panel of the oven door can be removed for cleaning.

Open the oven door.

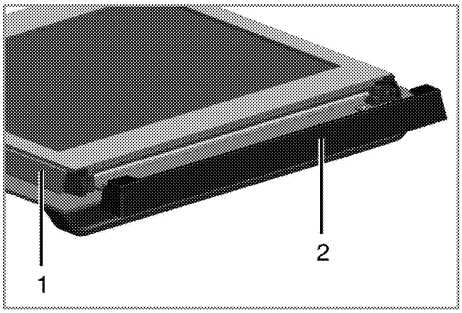

1 Frame

2 Plastic part

Pull towards yourself and remove the plastic part installed to upper section of the front door.

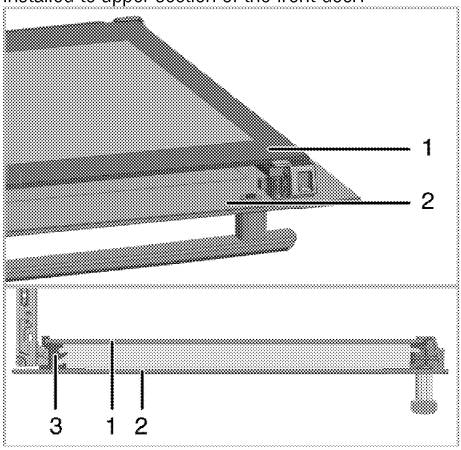

1 Inner glass panel

2 Outer glass panel

3 Plastic glass panel slot-Lower

As illustrated in figure, raise the innermost glass panel (1) slightly in direction **A** and pull it out in direction **B**.

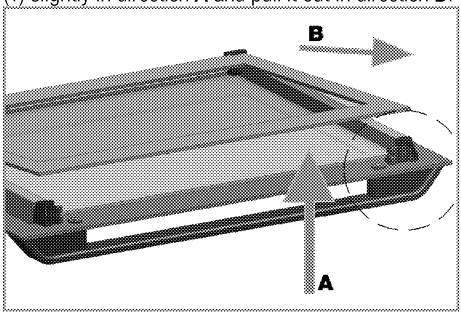

When installing the inner glass panel (1), make sure that the printed side of the panel faces towards the inner.

It is important to seat lower corner of inner glass panel into the lower plastic slot.

Push the plastic part towards the frame until you hear a "click".

Replacing the oven lamp

DANGER:
Before replacing the oven lamp, make sure that the product is disconnected from mains and cooled down in order to avoid the risk of an electrical shock.
Hot surfaces may cause burns!

The oven lamp is a special electric light bulb that can resist up to 300 °C. See *Technical specifications, page 11* for details. Oven lamps can be obtained from Authorised Service Agents or technician with licence.

Position of lamp might vary from the figure.

The lamp used in this appliance is not suitable for household room illumination. The intended purpose of this lamp is to assist the user to see foodstuffs.

The lamps used in this appliance have to withstand extreme physical conditions such as temperatures above 50 °C.

If your oven is equipped with a round lamp:

1. Disconnect the product from mains.
2. Turn the glass cover counter clockwise to remove it.

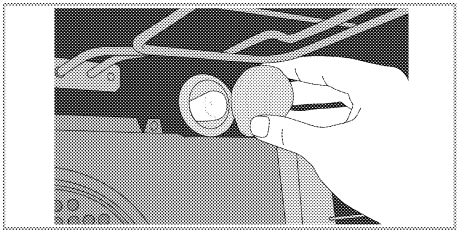

3. Remove the oven lamp by turning it counter clockwise and replace it with the new one.
4. Install the glass cover.

8 Troubleshooting

Oven emits steam when it is in use.

- It is normal that steam escapes during operation. >>> *This is not a fault.*

Product emits metal noises while heating and cooling.

- When the metal parts are heated, they may expand and cause noise. >>> *This is not a fault.*

Product does not operate.

- The mains fuse is defective or has tripped. >>> *Check fuses in the fuse box. If necessary, replace or reset them.*
- Product is not plugged into the (grounded) socket. >>> *Check the plug connection.*

Oven light does not work.

- Oven lamp is defective. >>> *Replace oven lamp.*
- Power is cut. >>> *Check if there is power. Check the fuses in the fuse box. If necessary, replace or reset the fuses.*

Oven does not heat.

- Function and/or Temperature are not set. >>> *Set the function and the temperature with the Function and/or Temperature knob/key.*
- Power is cut. >>> *Check if there is power. Check the fuses in the fuse box. If necessary, replace or reset the fuses.*

Consult the Authorised Service Agent or technician with licence or the dealer where you have purchased the product if you can not remedy the trouble although you have implemented the instructions in this section. Never attempt to repair a defective product yourself.